卫华集团
WEIHUA GROUP

卫华让世界轻松起来

WEIHUA MAKES THE WORLD EASIER

卫华集团微信公众号

卫华股份微信公众号

总部地址：中国·河南省长垣市山海大道 18 号
电子邮箱：info@craneweihua.com
Whatsapp: +86 18790692036
公司网址：www.globalweihua.com

HQ Add: No.18 Shanhai Road,Changyuan City,Henan Province,China
Email: info@craneweihua.com
Whatsapp: +86 18790692036
Website: www.globalweihua.com

本概况所有图片及文字信息受法律保护，未经卫华集团许可，不得擅自使用，违者必究！

WEIHUA



产品样本
PRODUCT SAMPLES

WHL 型钢丝绳电动葫芦

WHL TYPE WIRE ROPE ELECTRIC HOIST

■ 制造业单项冠军示范企业 ■ 全国质量标杆 ■ 中国机械工业百强 ■ 国家技术创新示范企业

产品分类
PRODUCT CLASSIFICATION

低净空运行式电动葫芦
LOW-HEADROOM MONORAIL HOIST

标准净空运行式电动葫芦
STANDARD HEADROOM MONORAIL HOIST

WEIHUA

卫华让世界轻松起来

Weihua Makes The World Easier

WEIHUA

卫华集团简介

GENERAL INTRODUCTION OF WEIHUA GROUP

卫华集团创建于1988年，是以研制桥门式起重机械、港口机械、电动葫芦、减速机、矿用机械、停车设备等产品为主的装备制造和以建筑工程总承包为主的大型企业集团。

卫华集团是中国重型机械工业协会、中国物料搬运协会和桥式起重机分会副理事长单位，先后荣获“制造业单项冠军示范企业”“中国机械工业百强”“全国守合同重信用企业”“千户集团企业”“全国质量标杆”“省长质量奖”等500多项荣誉称号。

作为国家技术创新示范企业、国家火炬计划重点高新技术企业，卫华拥有国家地方联合工程研究中心、国家认定企业技术中心、国家认可技术检验测试中心、博士后科研工作站、院士工作站等24个国家、省级研发平台。

以中国科学院院士杨叔子、中国工程院院士张铁岗为带头人的600人的科研团队，先后承接国家“863计划”“国家科技支撑计划”“国家火炬计划”项目，拥有授权专利941项，参与国际、国家、行业、地方标准119项。先后获得省部、市级科技进步奖项98项，获政府鉴定科技成果104项，其中创造世界纪录1项、国际领先4项、国际先进6项、国内领先93项。

在全球，卫华起重机械产品广泛应用于机械、冶金、矿山、电力、水利、铁路、港口、石油、化工等行业，服务于国内外大型企业和重点工程建设，并远销美国、英国、法国、俄罗斯、澳大利亚等130多个国家和地区。

创卫华国际品牌、兴中华民族工业。卫华将在“绿色化、智能化、定制化、网络化”方面，不断持续创新，为“卫华让世界轻松起来”的企业愿景而奋进。



WEIHUA

GENERAL INTRODUCTION OF WEIHUA GROUP

Founded in 1988, Weihua Group is a large-scale enterprise mainly engaged in machinery manufacturing including overhead crane, gantry crane, harbor machinery, electric hoist, reducer, mining machinery, parking equipment, etc, and EPC.

Weihua Group serves as Deputy Chief Director of the Heavy Machinery Industry Association , Material handling Association and the Sub-association of Bridge Crane in China. It has been honored with more than 500 awards such as “National Manufacturing Individual Champion Demonstration Enterprise”, “Top 100 Chinese Machinery Enterprise”, “Contract-honoring and Promise-keeping Enterprise of China”, “Qianhu Enterprise”, “National Quality Standard”, “Quality Award of Henan Provincial Governor”.

As National Innovation Demonstration Enterprise and Key High-Tech Enterprise of National Torch Plan, Weihua Group has established more than 24 national and provincial R&D platform such as United Engineering Research Center, National Enterprise Technology Center, National Technology and Inspection Center, Post-doctoral Scientific Research Workstation, Academician workstation.

Led by Mr. Yang Shuzi, the Academician of Chinese Academy of Sciences and Mr. Zhang Tiegang, the academician of Chinese Academy of Engineering, Weihua R&D team with more than 600 persons has undertaken “National 863 Program”, “ National Science Supporting Program” and “National Torch Plan”. It has obtained 941 issued patents and participated in drafting 119 international, national, industrial, local standards. It also has won 98 Provincial-level Scientific and Technological Progress Awards, 104 Scientific and Technological Achievement identified by government, including 1world record, 4 international leading achievement，6 international advanced achievements, and 93 domestic leading achievements .

Weihua’s products have been exported to more than 130 countries and regions, including America, United Kingdom, France, Russia, Australia etc. which are widely used in various fields, including machinery, metallurgy, mining, electricity, water conservancy, railway, harbor, petroleum, chemical industry and etc. They have been serving large enterprises and key construction projects at home .

Create Weihua international brand, revitalize Chinese national industry. Weihua will keep on continuous innovation in terms of “greenization, intelligentialize, customization, internet” and strive for the enterprise’s vision of “Weihua Makes The World Easier”.

制造业单项冠军示范企业

企业资质

ENTERPRISE QUALIFICATIONS

完善的质量保证体系，严格的质量控制，全面的质量管理，让每一个环节精益求精，每一个产品都日臻完美。国际先进的检测设备，国内权威的检测中心，稳步提升的质量检测水平，使我们在激烈的国际商战中，充满信心。

Complete quality assurance system, strict quality control and all-round quality management make each link and each product much more perfect. International top-ranktesting equipment, domestic authoritative testing center and steadily-improved quality testing level make us have full assurance during violent international trade war.





企业荣誉

ENTERPRISE HONORS

卫华先后荣获“制造业单项冠军示范企业”“全国质量标杆”“中国机械工业百强”“千户集团企业”“国家火炬计划重点高新技术企业”“国家认定企业技术中心”“全国守合同重信用企业”“全国机械工业质量奖”“河南省省长质量奖”“全国工业品牌培育示范企业”等 500 多项荣誉称号。

Weihua has won more than 500 awards and honors, such as National Monomial Champion Demonstration Enterprise of Manufacturing Industry, National Quality Standard, Top 100 China Machinery, Qianhu Enterprise, Key High- Tech Enterprise of National Torch Plan, National Certified Enterprise Technology Center , Contract-honoring and Promise-keeping Enterprise, National Quality Award of Machine Building Industry, Quality Award of Henan Provincial Governor and National Demonstration Enterprise of Industrial Brand Cultivation.



全新一代

WHL型

钢丝绳电动葫芦

WHL TYPE WIRE ROPE ELECTRIC HOIST

A 产品优势
PRODUCT ADVANTAGE

六大设计理念 打造匠心之作
The ingenious product is born based on six design concepts

1/ 核心技术自主可控设计理念
Autonomous and controllable design concept of core technology

2/ 模块化设计理念
Modular design concept

3/ 智能化、远程运维设计理念
Intelligent and remote operation and maintenance design concept

4/ 低净空、紧凑设计理念
Low headroom and compact design concept

5/ 免维护、节能环保设计理念
Design concept of maintenance-free, energy-saving and Green

6/ 坚固耐用、安全设计理念
Rugged and safe design concept

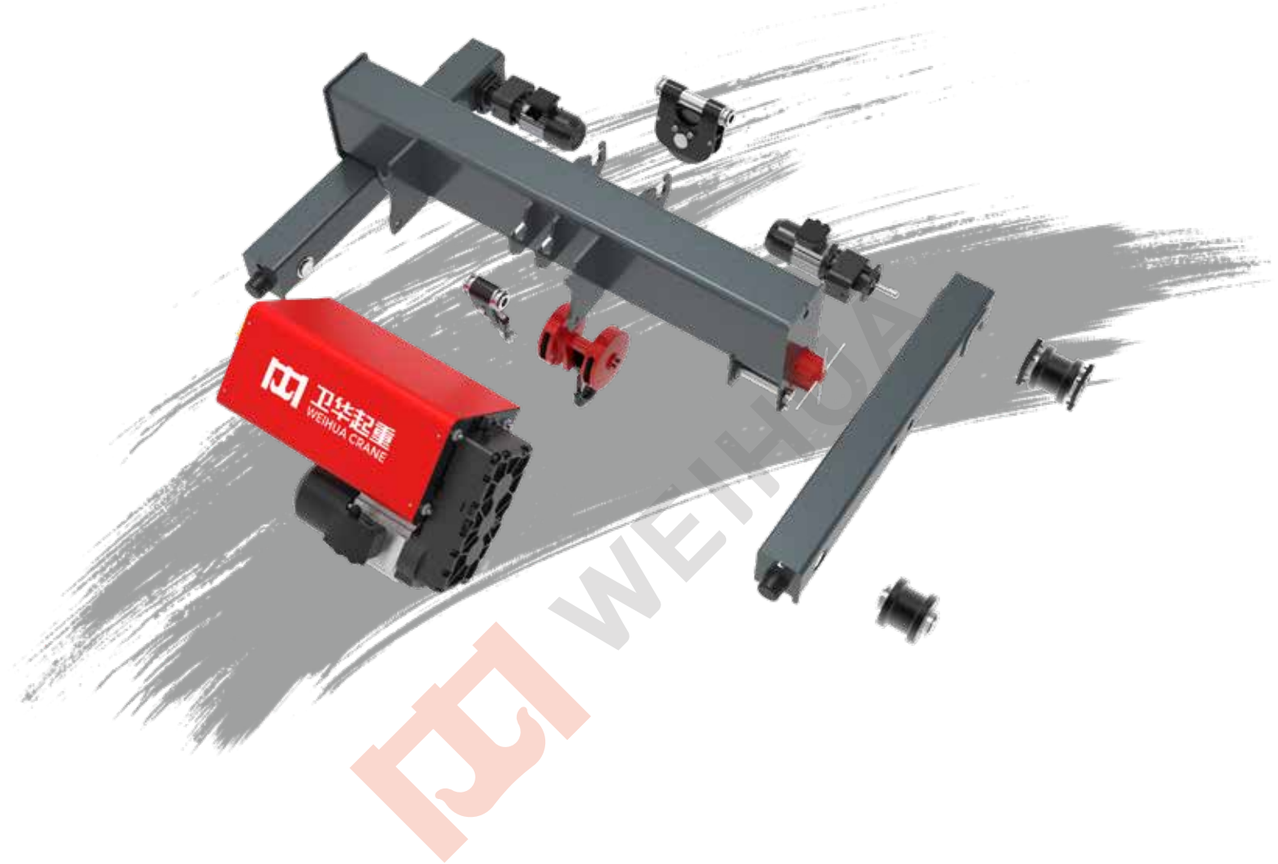

按照 ISO、GB、FEM、DIN、BS 等标准打造的全新一代电动葫芦产品：

WHL 型钢丝绳电动葫芦

WHL Type Wire Rope Electric Hoist:

A new generation Electric Hoist which fabricated according to ISO、GB、FEM、DIN、BS standards

01 核心技术自主可控设计理念 Autonomous and controllable design concept of core technology



起升驱动单元
Lifting Drive Unit



安全监控器
Security Monitor

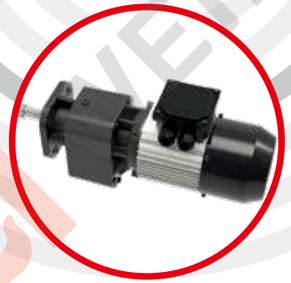

运行驱动单元
Travelling Drive Unit

与重点高校研究机构合作开发核心零部件，并完全自主生产制造，实现产品品质可控、工期可控。

Cooperate with major university research institutes to develop core spare part, and can realize the independent production of core spare part, so as to achieve controllable product quality and controllable construction period.



电机结构设计和电磁计算 Structural Design and Electromagnetic Calculation of Motor

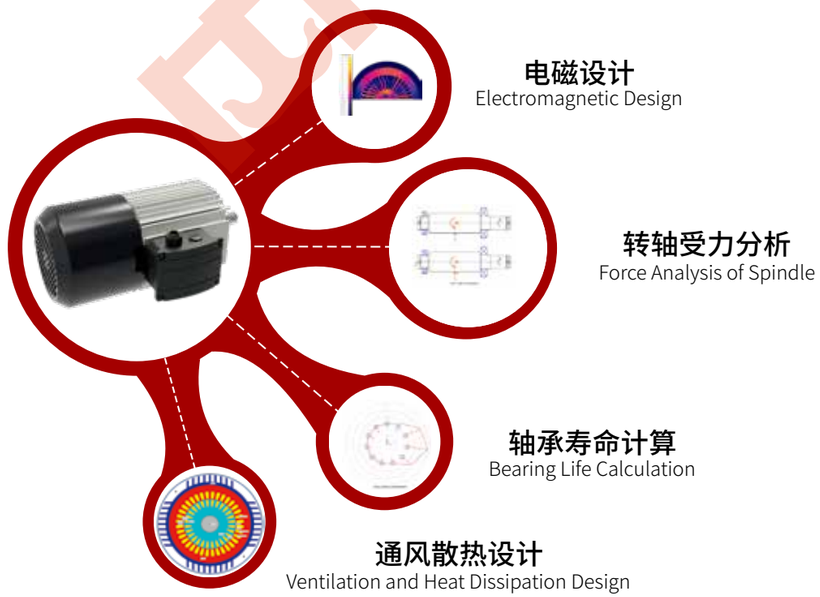

减速器结构设计 Structure Design of Reducer

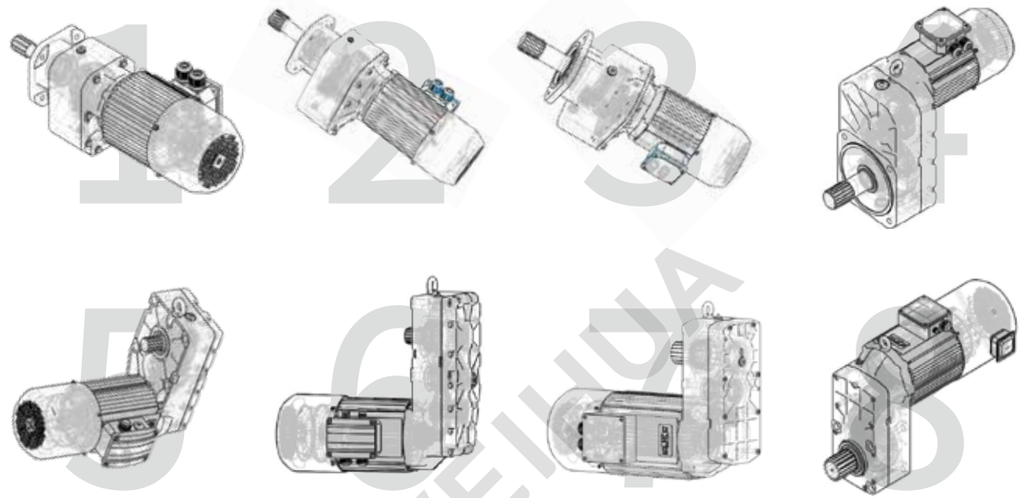

8种驱动装置 8 Kinds of Driving Devices

低碳合金锻钢，磨齿工艺
Low Carbon Alloy Forged Steel, Grinding Technology

优质密封件，重载工业齿轮油
High Quality Seals, Heavy Duty Industrial Gear Oil

轻合金材质壳体 Light Alloy Shell

ASW 防摇系统（第三代防摇摆控制系统）

ASW Anti-Swing System
(The Third Generation Anti-Swing Control System)

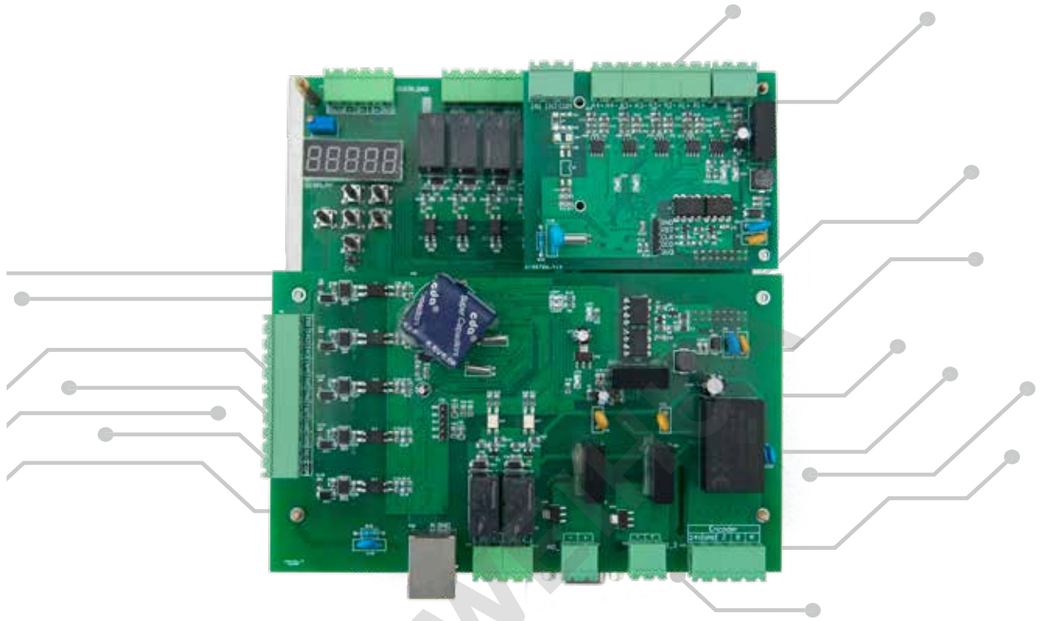

1
功能升级
Function Upgrade

可替代 PLC 实现逻辑控制及电气防摇摆功能

It can replace PLC to realize logic control and electric anti-swing function

2
高匹配性
High Matching

不限制变频器品牌

No restriction on inverter brand

3
成本优势
Cost Advantage

节约通讯卡、通讯线

Saving communication cards and lines

集中控制器

Integrated Controller

- 故障信息显示 Fault Information Display
- 电压电流保护 Voltage and Current Protection
- 超载保护功能 Overload Protection Function
- 运行记录功能 Travelling Record Function
- 逻辑控制功能 Logic Control Function
- 实时监测功能 Real-time Monitoring Function
- 防摇摆功能 Anti-swing Function
- 防歪拉斜吊 Anti Skewed and Inclined Lifting
- 大数据通信 Big Data Communication

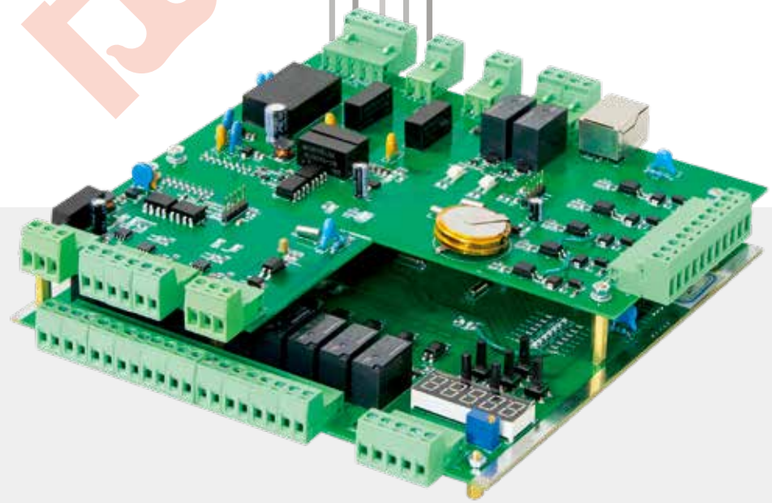

变频器 Frequency Converter

起重机专用 For Crane Use Only
小体积、小功率、高性价比
It owns the features as follows: small volume, small power and high cost performance

支持性好 High Support Performance
支持开环矢量控制和 V/F 控制方式，起动力矩大
It can support open-loop vector control and V/F control, the starting torque is large

特有控制功能 Special Control Function
配备起重驱动特有的报闸控制功能
Equipped with special brake control function of crane driving system

应用范围广 Wide Range of Applications
起重设备的提升、平移、回转等驱动和控制场合
It can be widely used in driving and controlling occasions such as the lifting, translation and rotation of lifting equipment



核心零部件“自主化”的优势 Independent Production of Core Components



02 模块化设计理念 Modular Design Concept

WHL 型钢丝绳电动葫芦采用模块化结构，可以充分满足您的应用需求，其拥有的灵活性，可以为您提供个性化需求的解决方案。

WHL Electric Hoist with modular structure can fully meet your requirements which owns flexibility and can provide you with solutions for personalized needs.

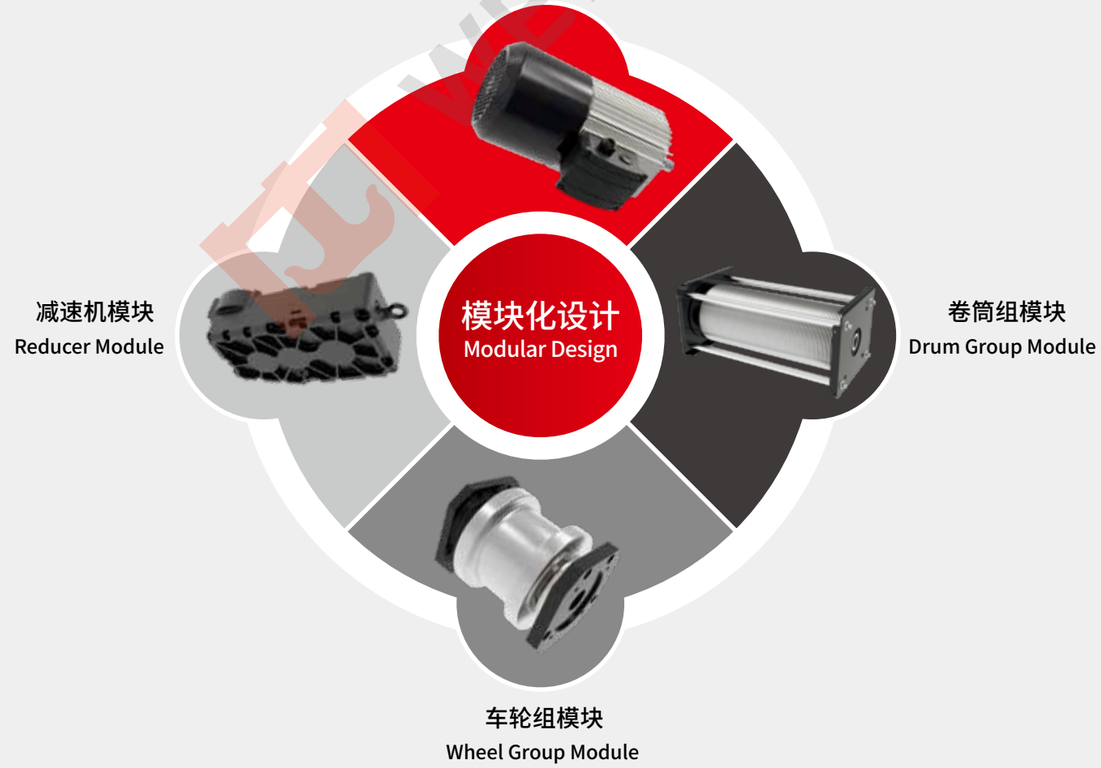

部件通用性强 Strong Versatility of Spare Parts

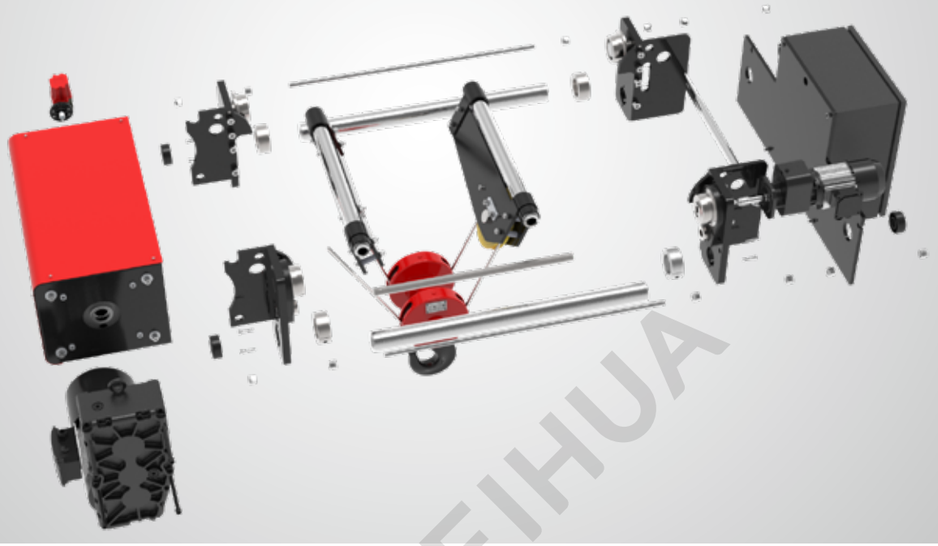

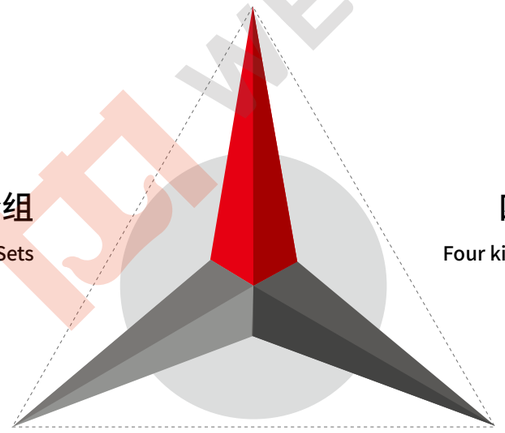

五种结构车轮组
Five kinds of Wheel Sets

四种运行三合一
Four kinds of Travelling Gear Motor

四种起升三合一
Four kinds of Hoisting Gear Motor

新型起重机系列产品
New Series Crane Products

- WHL 型系列钢丝绳电动葫芦
  WHL Series Steel Wire Rope Electric Hoist
- HD 型电动单梁起重机
  HD Single Girder Overhead Crane
- NLH 型电动葫芦桥式起重机
  NLH Overhead Crane with Electric Hoist

03 智能化、远程运维设计理念 Intelligent and Remote Operation and Maintenance Design Concept

智能安全监控
Intelligent safety monitoring system has the advantage as follows:

01 计算起升机构剩余安全工作周期
Calculating the remaining safety cycle of lifting mechanism

02 制动器安全工作次数
Brake safety operation times

03 累计设备起升及运行启动次数
Accumulated starts times of hoisting and travelling

04 记录起升负载吨位
Records the load tonnage

05 过载保护，禁止用户违规超载作业
Overload protection, prohibit users from illegal overloading operations

06 实时监测起重机运行电源情况
Real-time monitoring of crane's operating Power Supply

07 电机过热保护
Motor overheat protection

08 可扩展无线网关，接入用户大数据中心监控管理，实现远程运维信息提示
Extensible wireless access point, it can access to user's big data center monitoring management, so as to realize remote operation and maintenance



大数据管理
云平台连接
Big data management,
cloud platform connection

全新一代安全监控系统
A new generation of security monitoring system

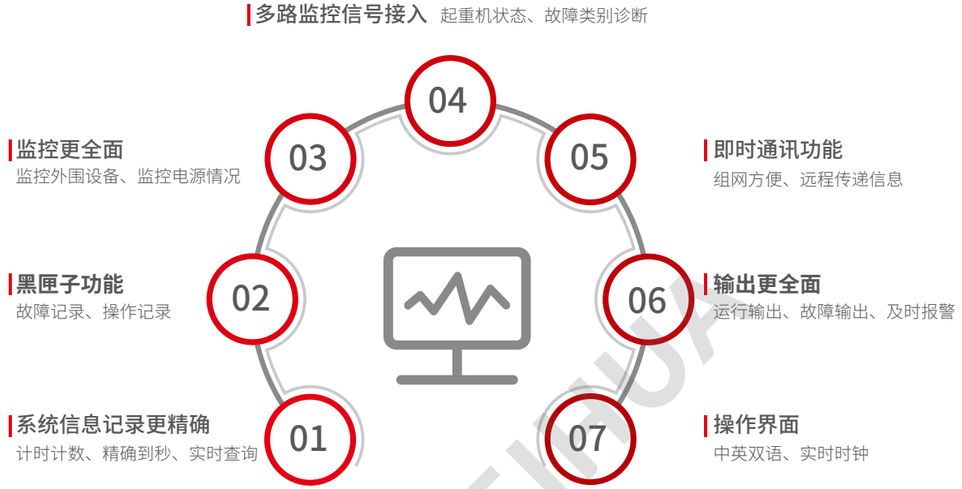

01 More accurate recording of system information: timing and counting can be accurate to seconds, and real-time queries can also be realized

02 Black Box Function which can record the malfunctions and operations

03 More comprehensive monitoring: it can monitor peripheral equipment and power supply situation

04 Multi-channel monitoring signal access: crane condition, fault category diagnosis

05 Instant Messaging Function which owns the features as follows: convenient networking and remote information transmission

06 More comprehensive output such as: operation output, fault output, timely alarming

07 Operating Interface: Both in Chinese-English Language, Real-time Clock



安全监控器
Security Monitor

电器元件布局图
Electrical Component Layout

手机 APP 实时监控
Mobile APP Real-time Monitoring

04 低净空、紧凑设计理念 Low Headroom and Compact Design Concept

所有系列均采用大直径卷筒，可有效实现起升高度的增加和左右极限的缩小，起重机工作盲区更小，给用户提供更大的使用空间。

All series Electric Hoist are equipped with large diameter drum, which can effectively increase the lifting height and reduce the left and right limits. Crane's dead zone when working becomes smaller, which can provide larger using space for the customers.

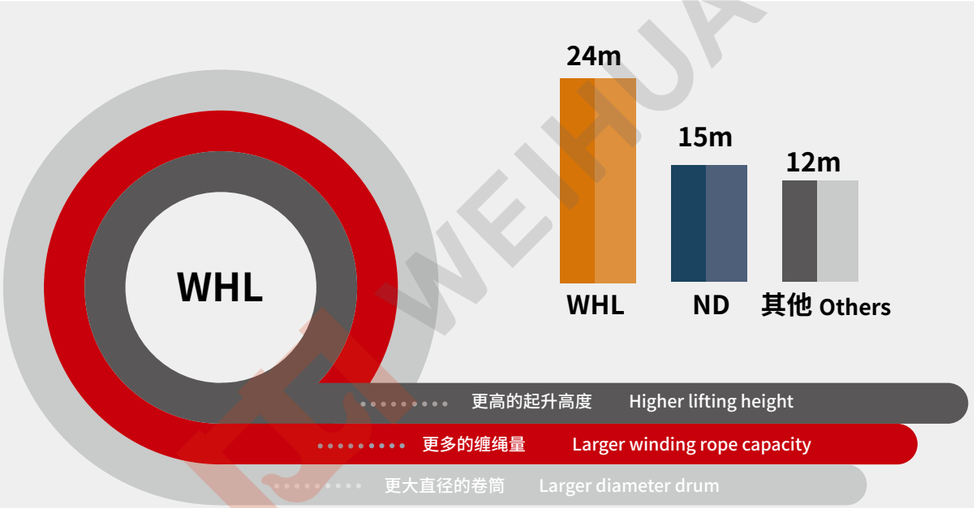

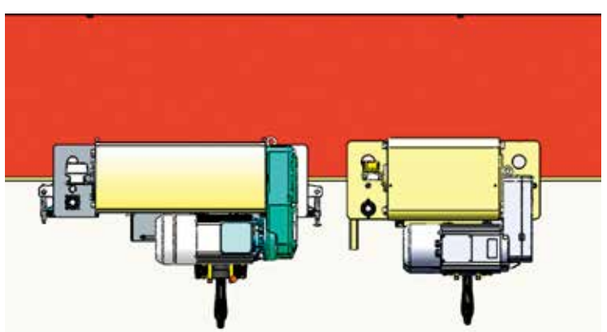

相同起升高度新老型号葫芦长度对比，WHL 型葫芦（右）
Comparison of the length of Traditional and New Type Electric Hoist with the same lifting height, WHL Type Electric Hoist (Right)

05 免维护、节能环保设计理念 Design Concept of Maintenance-free, Energy-saving and Green

电机减速器一体式结构设计
Integral Structure of Gear Motor



结构紧凑
Compact Structure

重量减轻
Reduce the Deadweight

降低噪音
Reduce Noise

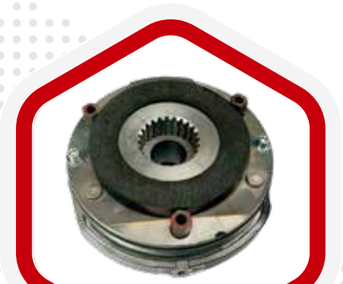

制动器
Brake



操作手柄
Pendent Controller



导绳器
Rope Guide

- 电机功率较传统电动葫芦降低 30%
  The motor power is reduced by 30% compared with the traditional Electric Hoist
- 通过变频定位技术的成熟应用，使工作效率提高 20% 以上
  Through the mature application of Variable frequency positioning technology, the work efficiency is improved by more than 20%
- 整机噪音在 70 分贝以下
  The noise of the whole machine is below 70 decibels
- 制动器刹车片采用无石棉设计
  The brake pads adopt non-asbestos design
- 尼龙导绳器与钢丝绳、卷筒滑动摩擦不会产生金属粉尘，为工人提供高洁净操作空间
  No metal dust caused by the slide friction between the Nylon Rope Guide and Steel Wire Rope, drum, providing workers with high cleanness operation environment

- 高精度硬齿面减速机出厂已加注国际品牌润滑油，产品生命周期内无需更换
  The high-precision hard gear reducer has been filled with international brand lubricants before delivery from factory , and there is no need to replace it within the service cycle of the product
- 采用国际品牌免维护钢丝绳
  Adopt international brand and maintenance-free steel wire rope
- 高强尼龙导绳器 , 由易损件成为耐用品
  High-strength Nylon rope guides, change from wearing parts to durable parts
- 国际品牌电器元件、轴承、操作手柄
  International brand electrical components, bearings, and pendent controller
- 电磁盘式制动器具有刹车间隙自动补偿和免维护功能
  Electromagnetic disk brake with automatic compensation of brake clearance and maintenance-free function

06 坚固耐用、安全设计理念 Rugged and Safe Design Concept







钢丝绳破断拉力不低于 2160 级
The breaking force of the wire rope reaching grade 2160

整机通过国家标准寿命试验（1600 小时）
The whole machine passed the national standard life test (1600 hours)

吊钩采用高强 T 级钩头
The hook adopts high-strength T-class hook head

电器元件机械寿命不低于 50 万次
The service life of electrical components is not less than 500,000 times

减速器 10 年免维护
10 years free maintenance of speed reducer

制动器安全制动不低于 100 万次
The safe use of brake reaching 1 million times

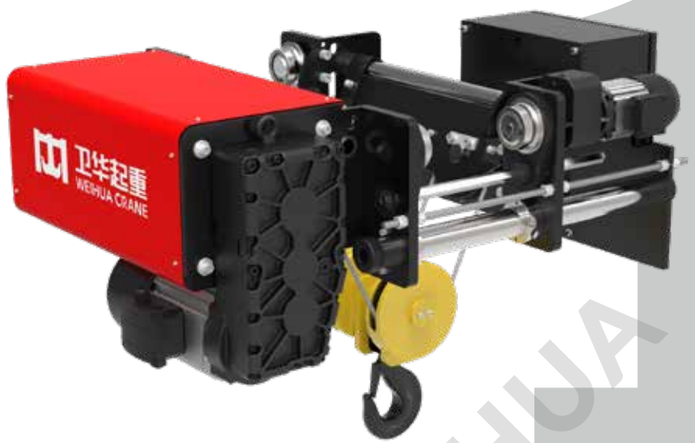

1

低净空运行式电动葫芦
Low-headroom Monorail Hoist



3

固定式电动葫芦
Foot-mounted Hoist

B 产品选型
PRODUCT SELECTION

WHL 型钢丝绳电动葫芦，
有四种结构设计可供用户选择：
WHL Wire Rope Electric Hoist has four structural designs for users to choose from:



2

标准净空运行式电动葫芦
Standard Headroom Monorail Hoist



4

双梁小车式电动葫芦
Trolley Type Electric Hoist

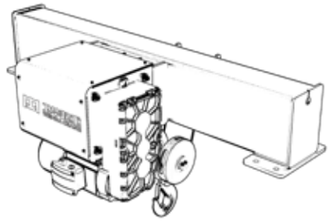

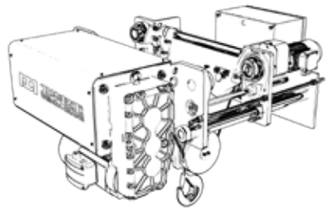

载荷类别 Load category		日平均工作时间（小时）Average daily working time (hours)		
1	轻载：极少吊运额定载荷，经常吊运载荷很轻。Light load: The rated load is rarely lifted and always handle the loads.	4~8	8~16	＞16
2	中载：有时吊运额定载荷，经常吊运载荷中等。Medium load: The rated load is sometimes lifted and the frequency of load handling is medium.	2~4	4~8	8~16
3	重载：经常需要吊运额定载荷，经常吊运载荷较重。Heavy load: The rated load is always lifted and the handling loads are always heavy.	1~2	2~4	4~8
4	特重载：经常吊运额定载荷。Super heavy load: always handling the rated load.	0.5~1	1~2	2~4
工作级别 Work duty		M5	M6	M7

滑轮倍率 Pulley ratio				型号 Model			
2/1	4/1	6/1	8/1				
4/2	8/2	12/2	16/2				
起重量 Lifting capacity							
1	2	—	—		—	—	
1.25	2.5	—	—		—		—
1.5	3	—	—	WHL1		—	
2	4	—	—		—		—
2.5	5	—	—	WHL2		—	—
3.2	6.3	10	—		—	—	
4	8	12.5	—		—		—
5	10	16	—	WHL3		—	
6.3	12.5	20	25		—		
8	16	25	32				—
10	20	32	40	WHL4		—	
12.5	25	40	50		—		
16	32	50	63				—
20	40	63	80	WHL5		—	—

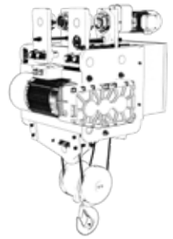

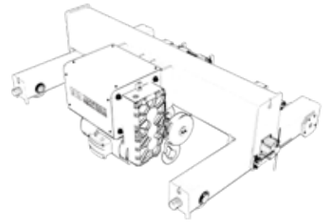

日平均工作时间可由下式计算：
Average daily working time can be calculated by the following formula :

$$T_m = \frac{2\times\text{吊钩行程（m）}\times\text{每小时循环次数}\times\text{日工作时间}}{60\times\text{起升速度（m/min）}}$$

$$T_m = \frac{2\times\text{Travelling distance of Hook}\times\text{Number of cycles per hour}\times\text{Working hours per day}}{60\times\text{Lifting speed （m/min）}}$$

实例
Example

起重量	10t
载荷类型	中等载荷
起升速度	5m/min
滑轮倍率	4/1
吊钩平均行程	估计为 6m
每小时循环次数	估计为 12 次
日工作时间	8 小时
载荷类型	中载

Lifting capacity	10t
Load category	Medium load
Lifting speed	5m/min
Pulley ratio	4/1
Average travelling distance of hook	Estimated to be 6m
Number of cycles per hour	Estimated to be 12 times
Daily working day	8 hours
Load category	Medium load

$$T_m = \frac{2\times6\times12\times8}{60\times5} = 3.84\text{小时(hour)}$$

表中给出工作级别为M5，起重量为10t和滑轮倍率为4/1，表中给出型号WHL3。
The working level is M5, the lifting capacity is 10t and the pulley ratio is 4/1. The model WHL3 is given in the table.

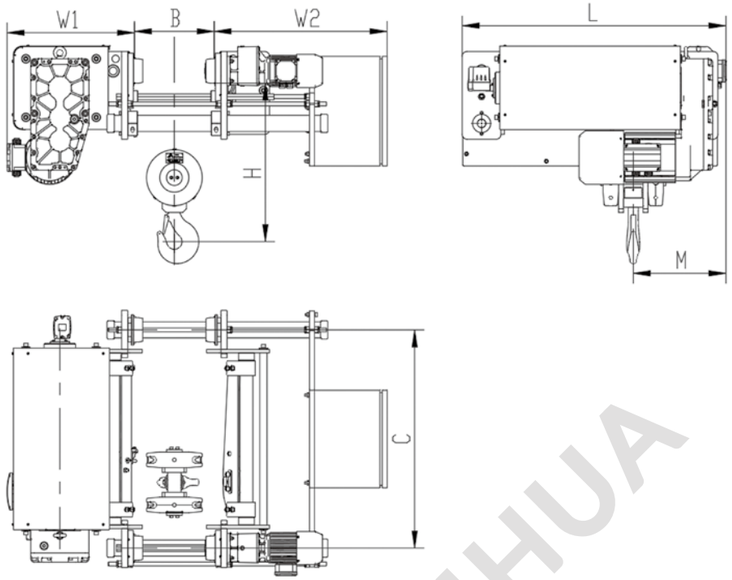

WHL系列低净空葫芦参数表

WHL series low headroom hoist parameter table

起重量 (t) Capacity (t)	工作级别 Work duty	起升速度 (m/min)Lifting speed (m/min)	起升高度 (m)Lifting height (m)	出绳方式 Number of falls	运行速度 Travelling speed (m/min)	轨道宽度 B(mm)	吊钩上极限 Hook upper limit H(mm)	葫芦宽度 Hoist width W1/W2 (mm)	吊钩右极限 Hook right limit M(mm)	葫芦总长 Hoist length L(mm)	葫芦轮距 Hoist wheel gauge C(mm)
3	M5	5/0.8	6	4/1	2~20	120~350	550	483 538	342	863	670
			9							1043	850
			12							1223	1030
			15							1403	1210
			18							1583	1390
			24							1943	1750
5	M5	5/0.8	6	4/1	2~20	120~450	650	526 713	382	798	605
			9							943	750
			12							1088	895
			15							1233	1040
			18							1378	1185
			24							1668	1475
10	M5	5/0.8	9	4/1	2~20	250~550	650	560 590	380	1010	790
			12							1130	910
			15							1250	1030
			18							1370	1150
			24							1610	1390

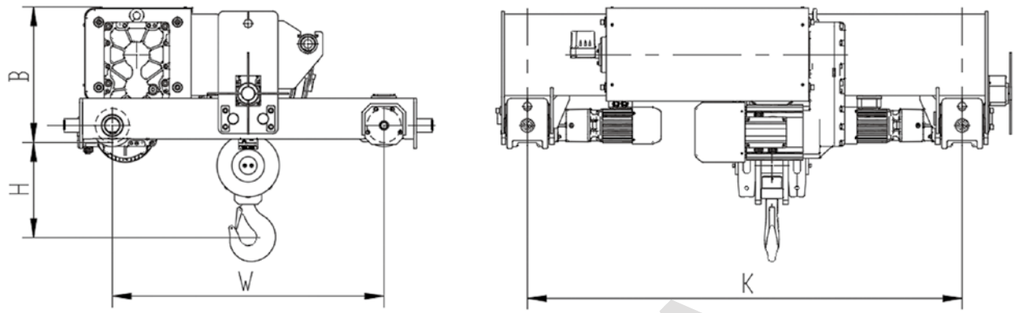

WHL系列小车参数表

WHL series trolley parameter table

起重量 (t) Capacity(t)	工作级别 Work duty	起升速度 (m/min) Lifting speed	起升高度 (m)Lifting height (m)	出绳方式 Number of falls	运行速度 (m/min) Travelling speed (m/min)	小车高度 Height of trolley B(mm)	吊钩上极限 Hook upper limit H(mm)	小车基距 Trolley wheel gauge W(mm)	小车轨距 Trolley gauge K(mm)
5	M5	5/0.8	⩽ 24	4/1	2~20	500	330	1000	1600 2200
10	M5	5/0.8	⩽ 24	4/1	2~20	605	520	1000	
16	M5	3.3/0.53	⩽ 16	6/1	2~20	700	860	1300	
16	M5	5/0.8	⩽ 24	4/1	2~20	670	800	1300	2000 2500 3000
20	M5	5/0.8	⩽ 24	4/1	2~20	670	800	1300	
32	M5	3.3/0.5	⩽ 16	6/1	2~20	750	975	1300	
32	M5	5/0.8	⩽ 24	8/2	2~20	720	1075	1300	
40	M5	5/0.8	⩽ 24	8/2	2~20	720	1075	1300	
50	M5	3.3/0.5	⩽ 24	12/2	2~20	770	1100	1400	2500 3000 3250 3750 4250
63	M5	2.4/0.4	⩽ 21	16/2	2~20	770	1100	1400	
80	M5	2.4/0.4	⩽ 21	16/2	2~20	785	1150	1600	



C 服务支持
SERVICE AND SUPPORT

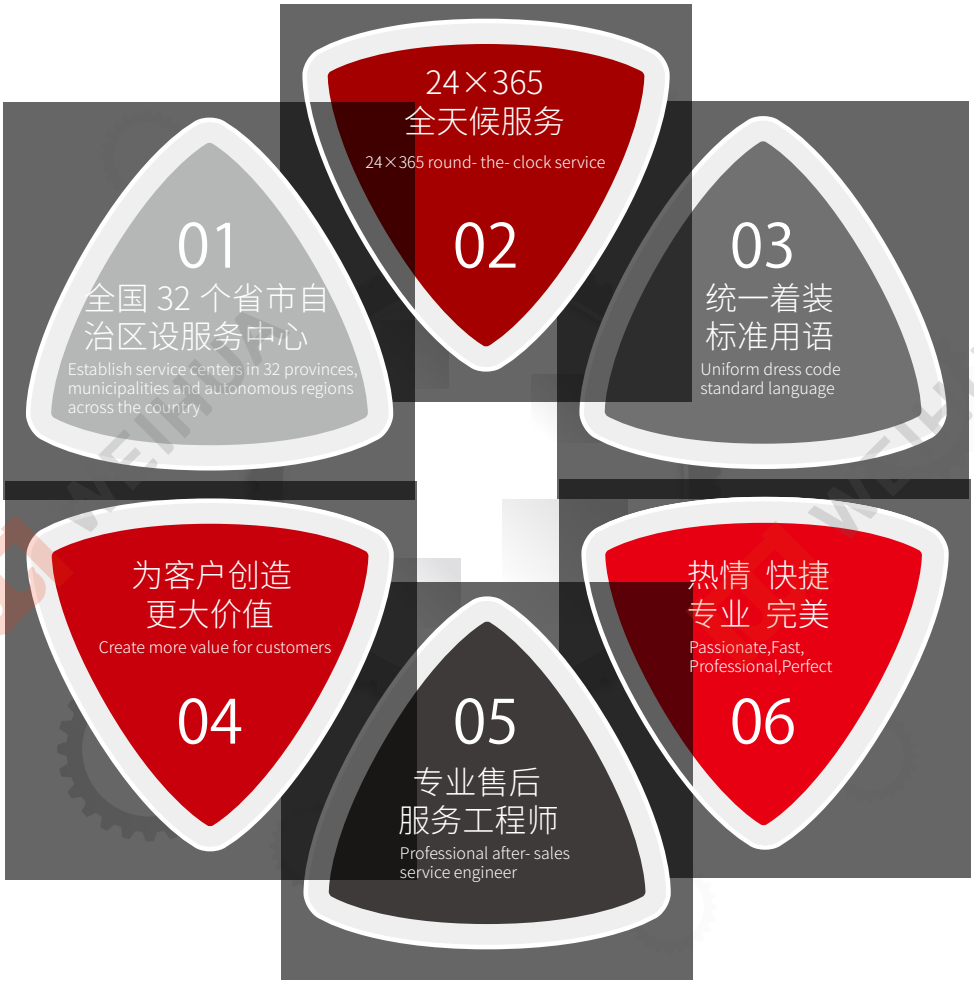

打过一次交道，便是永远朋友。卫华以满足客户需求、为客户创造价值为出发点，坚持践行“客户至上、创造价值”的服务理念，逐步打造、完善以客户为中心的售前、售中、售后一站式服务体系，为客户提供优质产品、优良服务，让世界因卫华而轻松起来。

We will be friend forever after we have made dealings once. Starting from customer’ s needs and value, Weihua adheres to the service concept of “Customer-centered concept leads to value creation” and gradually perfects the service quality from pre-sales to after-sales. We have confidence to provide customers with quality products and excellent services and to make the world easier.

Email: aiden@craneweihua.com

Whatsapp: +86 17513230665