卫华集团
WEIHUA GROUP

卫华让世界轻松起来
WEIHUA MAKES THE WORLD EASIER

卫华集团微信公众号　　卫华股份微信公众号

总部地址：中国·河南省长垣市山海大道18号
销售电话：0373-888 7666　　400 0058 886
售后电话：0373-888 7689　　400 7790 686
公司网址：www.cranewh.com
人才热线：0373-888 7510

HQ add: No.18 Shanhai Road,Changyuan City,Henan Province,China
Sales Tel: +86 373 888 7666
After-sale Tel: +86 373 888 7689
Website: www.cranewh.com
HR hotline: +86 373 888 7510

本概况所有图片及文字信息受法律保护，未经卫华集团许可，不得擅自使用，违者必究！



产品样本
PRODUCT CATALOG

吊具事业部产品样本

SPREADER BUSINESS DEPARTMENT PRODUCT CATALOG

■ 制造业单项冠军示范企业 ■ 全国质量标杆 ■ 中国机械工业百强 ■ 国家技术创新示范企业

产品分类
PRODUCT CLASSIFICATION

抓斗 GRAB BUCKETS
吊具 SPREADERAS
智能搬运 INTELLIGENT HANDLING

WEIHUA

卫华让世界轻松起来

WEIHUA MAKES THE WORLD EASIER

卫华集团简介

GENERAL INTRODUCTION OF WEIHUA GROUP

卫华集团始建于1988年，是以研制桥、门式起重机械、港口机械、电动葫芦、减速机、散料输送设备等产品为主的大型装备制造企业。

卫华先后荣获“国家技术创新示范企业”“国家火炬计划重点高新技术企业”“国家认定企业技术中心”“全国质量标杆”“国家级绿色工厂”“国家级工业设计中心”等500多项荣誉称号。

卫华拥有10大系列200多个品类起重机械生产制造资质。主导产品广泛应用于机械、冶金、矿山、电力、铁路、港口、石油、化工等行业，服务于西气东输、南水北调、奥运工程、杭州湾跨海大桥等国家重点工程和中国中煤、中国神华、中国石化、中国石油、宝武钢铁等数千家大型企业，并远销俄罗斯、泰国、马来西亚、澳大利亚等130多个国家和地区。

卫华拥有33个国家级、省级研发平台，以中国工程院院士张铁岗、马玉山为带头人的1000余人的科研团队，先后承接7项国家重大专项，拥有授权专利1200余项。自主研发的电气防摇摆控制技术国际领先，400米超高卷扬创起升高度最大世界纪录，AICrane智能控制系统创造真正的起重机器人，新中式起重机定义起重新概念，推动中国起重技术不断迭代更新！

创卫华国际品牌，兴中华民族工业。卫华致力于成为全球领先的物料搬运装备制造商及系统解决方案提供商，为高端装备制造业贡献一个世界级品牌。

1988

◆ 创建于1988年

500+

◆ 荣获500多项荣誉称号

130+

◆ 产品销往130多个国家和地区



WEIHUA

GENERAL INTRODUCTION OF WEIHUA GROUP

Founded in 1988, Weihua Group is a large-scale equipment manufacturer specializing in the R&D of overhead cranes, gantry cranes, port machinery, electric hoists, reducers, bulk material conveying equipment and so on.

Weihua has been honored with more than 500 awards, such as “National Demonstration Enterprise of Technological Innovation”, “Key High-Tech Enterprise of National Torch Plan”, “National Recognized Enterprise Technology Center”, “National Quality Benchmark”, “National Green Factory”, “National Industrial Design Center”.

Weihua has been developed 10 series of more than 200 types of lifting equipment. The main products are widely used in machinery, metallurgy, mine, power, railway, harbor, petroleum, chemical industries to serve thousands of large enterprises and national key projects, such like West-East Natural Gas Transmission, South-North Water Transfer Project, Olympic project, Hangzhou Bay Sea-Crossing Bridge Project, China National Coal, China Shenhua Energy, SINOPEC, CNPC, Shanghai Baosteel etc. They have been exported to more than 130 countries and regions, including Russia, Thailand, Malaysia, Australia and so on.

Weihua has 33 national and provincial R&D platforms. Led by Zhang Tiegang, and Ma Yushan, academicians of the Chinese Academy of Engineering, the research team of more than 1000 people has successively undertaken 7 national major projects and more than 1200 authorized patents. Thereinto, independent R&D electrical anti-sway control technology is leading in the world, winch with lifting height of 400 meters set up a world record for the largest lifting height, AI Crane intelligent control system creates a real crane robot. Weihua new generation cranes lead the crane development trend.

“Create Weihua International Brand, Revitalize Chinese Industry”. Weihua is committed to be one of the leading enterprises of material handling equipment and system solutions in the world, creating a world-class brand in the high-end equipment manufacturing industry.

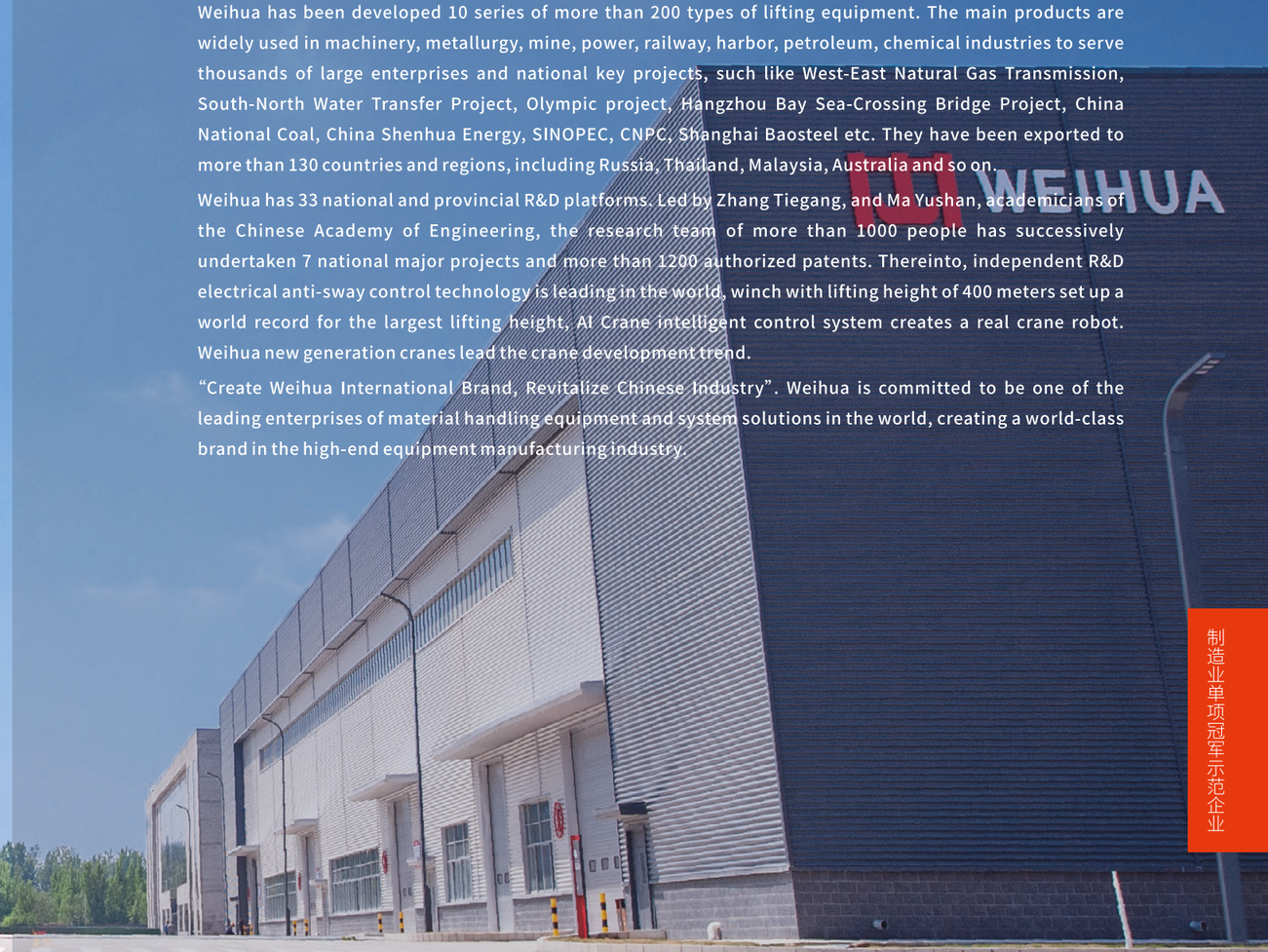

制造业单项冠军示范企业

企业资质
ENTERPRISE QUALIFICATIONS

完善的质量保证体系，严格的质量控制，全面的质量管理，让每一个环节精益求精，每一个产品都日臻完美。国际先进的检测设备，国内权威的检测中心，稳步提升的质量检测水平，使我们在激烈的国际商战中，充满信心。

Complete quality assurance system, strict quality control and all-round quality management make each link and each product much more perfect. International top-ranktesting equipment, dumestic authoritative testing center and steadily-improved quality testing level make us have full assurance during violent international trade war.

制造业单项冠军示范企业





WEIHUA

企业荣誉

ENTERPRISE HONORS

卫华先后荣获“制造业单项冠军示范企业”“全国质量标杆”“中国机械工业百强”“千户集团企业”“国家火炬计划重点高新技术企业”“国家认定企业技术中心”“全国守合同重信用企业”“全国机械工业质量奖”“河南省省长质量奖”“全国工业品牌培育示范企业”等500多项荣誉称号。

Weihua has won more than 500 awards and honors, such as National Monomial Champion Demonstration Enterprise of Manufacturing Industry, National Quality Standard, Top 100 China Machinery, Qianhu Enterprise, Key High- Tech Enterprise of National Torch Plan, National Certified Enterprise Technology Center , Contract-honoring and Promise-keeping Enterprise, National Quality Award of Machine Building Industry, Quality Award of Henan Provincial Governor and National Demonstration Enterprise of Industrial Brand Cultivation.



吊具事业部 简介
Introduction to Spreader Business Department

吊具事业部成立于 2020 年，隶属河南卫华重型机械股份有限公司。

事业部产品涵盖抓斗、集装箱吊具、钢卷吊具、龙门钩吊具、挂梁类吊具及特殊类、智能类定制吊具等吊具类产品和液压兑铁车、浇钢车、全自动板材搬运工作站等非吊具类产品。

事业部现有人员近 200 名，技术占比 30% 以上，拥有经验丰富的机械、结构、电控、液压、气动、力学分析人员及高级工程师，其中教授级高工 2 名，高级工程师 7 名，研究生学历人员 19 名，荣获国家发明专利 22 项。

事业部生产场地 4 万平米，板材预处理生产线、激光下料、落地镗铣床、双面镗床等关键设备和完善的研发、制造、试验及改进机制，确保每一款产品性能可靠，质量稳定。

The Spreader Business Department was established in 2020 and is affiliated with Henan Weihua Heavy Machinery Co., Ltd.

The products include grab buckets, container spreaders, steel coil spreaders, gantry hook spreader, hanging beam spreader, special and intelligent customized spreaders, as well as non lifting equipment products such as hydraulic hot metal charging carriage, steel pouring truck, and fully automatic sheet metal handling workstation.

The department has nearly 200 personnels, with technicians accounting for more than 30%. It has experienced mechanical, structural, electrical control, hydraulic, pneumatic, mechanical analysis personnel and senior engineers, including 2 professor senior engineers, 7 senior engineers, and 19 graduate degree holders. It has won 22 national invention patents.

The production site is 40000 square meters, with key equipment such as plate pretreatment production line, laser cutting, floor boring and milling machine, double-sided boring machine, and a complete R&D, manufacturing, testing, and improvement mechanism to ensure reliable performance and stable quality of each product.

制造业单项冠军示范企业

WEIHUA

CONTENTS 目录

吊具事业部产品样本
Spreader Business Department Product Catalog

本样本所供参数仅供选型参考，具体型号参数以本公司实际产品设计为准，欢迎咨询。

The parameters provided in this sample are only for model selection reference.
The specific model parameters are subject to the actual product design of our company.
Welcome to consult.

抓斗 P.01

GRAB BUCKETS

四绳双瓣抓斗 Four Rope Double Petal Grab Bucket P.01
四绳多瓣抓斗 Four Rope Multi Petal Grab Bucket P.04
双绳抓斗 Double Rope Grab Bucket P.05
单绳抓斗 Single Rope Grab Bucket P.06
派拿抓斗 Paina Grab Bucket P.07
电动抓斗 Electric Grab Bucket P.10
电动液压抓斗 Electric Hydraulic Grab Bucket P.11

集装箱吊具 P.15

CONTAINER SPREADERS

电动式集装箱吊具 Electric Container Spreader P.15
液压式集装箱吊具 Hydraulic Container Spreader P.16
倾翻式集装箱吊具 Tilting Container Spreader P.17

钢卷吊具 P.19

STEEL COIL SPREADERS

三丝杠钢卷吊具 Three Screw Steel Coil Spreader P.19
C 型钩钢卷吊具 C Hook Steel Coil Spreader P.20
电动钢卷吊具 Electric Steel Coil Spreader P.21

龙门钩吊具 P.22

GANTRY HOOK SPREADER

挂梁类吊具 P.22

HANGING BEAM SPREADER

定制吊具 P.23

CUSTOMIZED SPREADER

智能类定制吊具 Intelligent Customized Spreader P.23
特殊类定制吊具 Special Customized Spreader P.25

非吊具类产品 P.27

OTHER PRODUCTS

液压兑铁车 Hydraulic Hot Metal Charging Carriage P.27
浇钢车 Steel Pouring Truck P.28
全自动板材搬运工作站 Fully Automatic Sheet Metal Handling Workstation P.30

WEIHUA

产品详情
PRODUCT DETAILS

制造业单项冠军示范企业

抓斗 GRAB BUCKETS

01 四绳双瓣抓斗 Four Rope Double Petal Grab Bucket

主要与桥、门式起重机配套使用，由起升钢丝绳、开闭钢丝绳、导绳轮、定滑轮及上承梁、动滑轮及下承梁、撑杆、斗部等组成。用于抓取各类松散堆积物，进行装车、卸车、转运、加料等作业。

该类抓斗技术成熟，各铰点衬套采用优质轴承钢，刃口板加厚处理，抓斗更耐磨，使用寿命更长。

This product is mainly used with bridge cranes and gantry cranes, it consists of lifting steel wire ropes, opening and closing steel wire ropes, guide pulleys, fixed pulleys and upper support beams, moving pulleys and lower support beams, support rods, bucket parts, etc. It is employed to grab various loose materials for loading, unloading, transportation, feeding and other operations.

This type of grab bucket has mature technology, and the bushings at each hinge point are made of high-quality bearing steel. The blade plate is thickened, making the grab bucket more wear-resistant and having a longer service life.

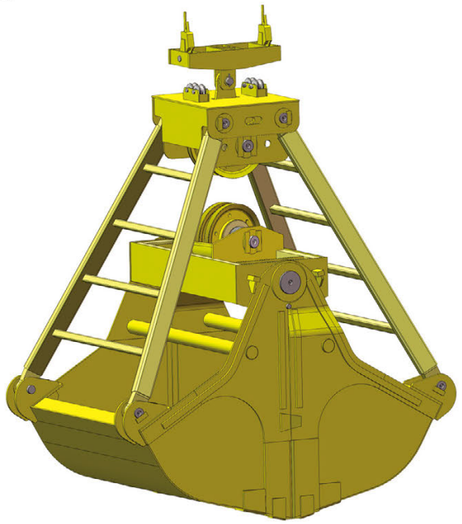



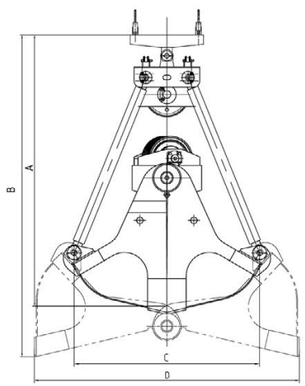

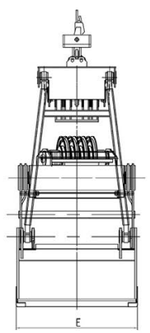

型号说明 Model Description:

ZS42 4-10-0200 C

- 安装斗齿 Installing bucket teeth
- 抓斗容积 Grab bucket capacity
- 行车吨位 Crane capacity：5t、10t、16t、20t
- 2- 轻型 Light t ⩽ 1 t/m³;
  3- 中型 Medium1 t/m³ ＜ t ⩽ 2 t/m³;
  4- 重型 Heavy 2 t/m³ ＜ t ⩽ 2.5 t/m³;
  5- 超重型 Super heavy 2.5 t/m³ ＜ t ⩽ 3.3 t/m³;
- 四绳双瓣抓斗 Four rope double petal grab bucket

设备型号 / 技术参数 Product Model/Technical Specifications

序号 No.	型号 Model	容积 Capacity (m^3)	类型 Type	物料比重 Material Specific Gravity (t/m^3)	滑轮倍率 Pulley ratio	钢绳直径 Rope Diameter (ϕmm)	滑轮直径 Pulley Diameter (ϕmm)	抓斗自重 Grab Bucket Weight (t)	配用起重机吨位 Crane Capacity (t)	抓斗闭合高度 Grab Bucket Closing Height (Amm)	抓斗张开高度 Grab Bucket Opening Height (Bmm)	抓斗闭合长度 Grab Bucket Closing Length (Cmm)	抓斗张开长度 Grab Bucket Opening Length (Dmm)	抓斗宽度 Grab Bucket Width (Emm)	备注 Note
1	ZS422-5-0300	3	轻 Light	⩽ 1	3	ϕ16	ϕ400	2.75	5	2922	3403	2200	3020	1820	
2	ZS422-5-0250	2.5	轻 Light	⩽ 1	3	ϕ16	ϕ400	2.73	5	2975	3514	2200	3120	1600	
3	ZS423-5-0200	2	中 Medium	＞ 1~2	5	ϕ16	ϕ400	2.71	5	3084	3547	2150	2985	1520	
4	ZS423-5-0200C	2	中 Medium	＞ 1~2	5	ϕ16	ϕ400	2.73	5	3137	3658	2150	2985	1520	带齿 With tooth
5	ZS423-5-0150	1.5	中 Medium	＞ 1~2	5	ϕ16	ϕ400	2.50	5	2984	3429	1950	2750	1360	
6	ZS423-5-0150C	1.5	中 Medium	＞ 1~2	5	ϕ16	ϕ400	2.57	5	3037	3540	1950	2860	1360	带齿 With tooth
7	ZS424-5-0100	1	重 Heavy	＞ 2~2.5	6	ϕ16	ϕ400	2.45	5	2855	3270	1850	2535	1150	
8	ZS424-5-0100C	1	重 Heavy	＞ 2~2.5	6	ϕ16	ϕ400	2.50	5	2908	3381	1850	2635	1150	带齿 With tooth
9	ZS425-5-0075	0.75	超重 Super heavy	＞ 2.5~3.3	6	ϕ16	ϕ400	2.30	5	2760	3144	1650	2340	1054	
10	ZS425-5-0075C	0.75	超重 Super heavy	＞ 2.5~3.3	6	ϕ16	ϕ400	2.32	5	2813	3255	1650	2460	1054	带齿 With tooth
11	ZS422-10-0500	5	轻 Light	⩽ 1	3	ϕ20	ϕ500	4.26	10	3795	4430	2820	3800	2050	
12	ZS422-10-0400	4	轻 Light	⩽ 1	3	ϕ20	ϕ500	4.24	10	3595	4153	2445	3431	2210	
13	ZS423-10-0300	3	中 Medium	＞ 1~2	5	ϕ20	ϕ500	4.38	10	3595	4153	2445	3431	1810	
14	ZS423-10-0300C	3	中 Medium	＞ 1~2	5	ϕ20	ϕ500	4.42	10	3695	4332	2445	3431	1810	带齿 With tooth
15	ZS423-10-0200	2	中 Medium	＞ 1~2	5	ϕ20	ϕ500	4.25	10	3640	4127	2200	3251	1550	
16	ZS423-10-0200C	2	中 Medium	＞ 1~2	5	ϕ20	ϕ500	4.29	10	3694	4268	2200	3251	1550	带齿 With tooth
17	ZS424-10-0200	2	重 Heavy	＞ 2~2.5	6	ϕ20	ϕ500	3.95	10	3640	4127	2200	3251	1550	
18	ZS424-10-0200C	2	重 Heavy	＞ 2~2.5	6	ϕ20	ϕ500	4.00	10	3694	4268	2200	3251	1550	带齿 With tooth
19	ZS425-10-0150	1.5	超重 Super heavy	＞ 2.5~3.3	6	ϕ20	ϕ500	3.78	10	3357	3814	2020	2969	1470	
20	ZS425-10-0150C	1.5	超重 Super heavy	＞ 2.5~3.3	6	ϕ20	ϕ500	3.82	10	3409	3955	2020	2969	1470	带齿 With tooth
21	ZS425-10-0100	1	超重 Super heavy	＞ 2.5~3.3	6	ϕ20	ϕ500	3.46	10	3052	3445	1676	2280	1464	
22	ZS425-10-0100C	1	超重 Super heavy	＞ 2.5~3.3	6	ϕ20	ϕ500	3.50	10	3141	3578	1676	2280	1464	带齿 With tooth
23	ZS422-16-0800	8	轻 Light	⩽ 1	3	ϕ24	ϕ600	7.96	16	4545	5292	3205	4387	2370	

续表 Continued table

序号 No.	型号 Model	容积 Capacity (m^3)	类型 Type	物料比重 Material Specific Gravity (t/m^3)	滑轮倍率 Pulley ratio	钢绳直径 Rope Diameter (φmm)	滑轮直径 Pulley Diameter (φmm)	抓斗自重 Grab Bucket Weight (t)	配用起重机吨位 Crane Capacity (t)	抓斗闭合高度 Grab Bucket Closing Height (Amm)	抓斗张开高度 Grab Bucket Opening Height (Bmm)	抓斗闭合长度 Grab Bucket Closing Length (Cmm)	抓斗张开长度 Grab Bucket Opening Length (Dmm)	抓斗宽度 Grab Bucket Width (Emm)	备注 Note
24	ZS422-16-0700	7	轻 Light	⩽1	3	φ24	φ600	7.54	16	4610	5359	3166	4530	2297	
25	ZS422-16-0600	6	轻 Light	⩽1	3	φ24	φ600	7.60	16	4610	5359	3166	4530	2000	
26	ZS422-16-0600C	6	轻 Light	⩽1	3	φ24	φ600	7.69	16	4700	5490	3166	4530	2000	带齿 With tooth
27	ZS423-16-0600	6	中 Medium	＞1~2	5	φ24	φ600	7.77	16	4610	5359	3166	4530	2000	
28	ZS423-16-0600C	6	中 Medium	＞1~2	5	φ24	φ600	7.86	16	4700	5490	3166	4530	2000	带齿 With tooth
29	ZS423-16-0480	4.8	中 Medium	＞1~2	5	φ24	φ600	7.66	16	4320	4948	2820	4068	2020	
30	ZS423-16-0480C	4.8	中 Medium	＞1~2	5	φ24	φ600	7.82	16	4410	5080	2820	4068	2020	带齿 With tooth
31	ZS424-16-0400	4	重 Heavy	＞2~2.5	5	φ24	φ600	7.36	16	4320	4948	2820	4068	1770	
32	ZS424-16-0400C	4	重 Heavy	＞2~2.5	5	φ24	φ600	7.52	16	4410	5080	2820	4068	1770	带齿 With tooth
33	ZS424-16-0320	3.2	重 Heavy	＞2~2.5	6	φ24	φ600	7.65	16	4175	4750	2600	3726	1781	
34	ZS424-16-0320C	3.2	重 Heavy	＞2~2.5	6	φ24	φ600	7.75	16	4265	4880	2600	3726	1781	带齿 With tooth
35	ZS425-16-0250	2.5	超重 Super heavy	＞2.5~3.3	6	φ24	φ600	6.88	16	4117	4642	2350	3431	1550	
36	ZS425-16-0250C	2.5	超重 Super heavy	＞2.5~3.3	6	φ24	φ600	6.98	16	4210	4772	2350	3431	1550	带齿 With tooth
37	ZS422-20-1000	10	轻 Light	⩽1	3	φ28	φ700	10.52	20	5103	5850	3500	5021	2496	
38	ZS422-20-1000C	10	轻 Light	⩽1	3	φ28	φ700	10.66	20	5202	6029	3500	5021	2496	带齿 With tooth
39	ZS422-20-0800	8	轻 Light	⩽1	5	φ28	φ700	10.72	20	5103	5850	3500	5021	2096	
40	ZS422-20-0800C	8	轻 Light	⩽1	5	φ28	φ700	10.86	20	5202	6029	3500	5021	2096	带齿 With tooth
41	ZS423-20-0600	6	中 Medium	＞1~2	5	φ28	φ700	10.00	20	4172	5455	3200	4557	2220	
42	ZS423-20-0600C	6	中 Medium	＞1~2	5	φ28	φ700	10.20	20	4271	5634	3200	4557	2220	带齿 With tooth
43	ZS424-20-0400	4	重 Heavy	＞2~2.5	6	φ28	φ700	9.80	20	4583	5250	2900	4124	1890	
44	ZS424-20-0400C	4	重 Heavy	＞2~2.5	6	φ28	φ700	10.00	20	4682	5430	2900	4150	1890	带齿 With tooth
45	ZS425-20-0300	3	超重 Super heavy	＞2.5~3.3	6	φ28	φ700	8.85	20	4431	4903	2399	3822	1890	
46	ZS425-20-0300C	3	超重 Super heavy	＞2.5~3.3	6	φ28	φ700	9.05	20	4530	5083	2399	3822	1890	带齿 With tooth

02 四绳多瓣抓斗 Four Rope Multi Petal Grab Bucket

斗瓣数量可根据抓取物料特点及用户需要设计成四瓣至八瓣，适用于废钢铁大块物料和垃圾物装卸，在港口、铁路、冶金、矿山、建筑等行业广泛使用。

The number of buckets can be designed into 4 to 8 buckets based on the characteristics of the material being grabbed and the needs of the user. It is suitable for loading and unloading large pieces of scrap steel and garbage, and is widely used in industries such as ports, railways, metallurgy, mines, and construction.

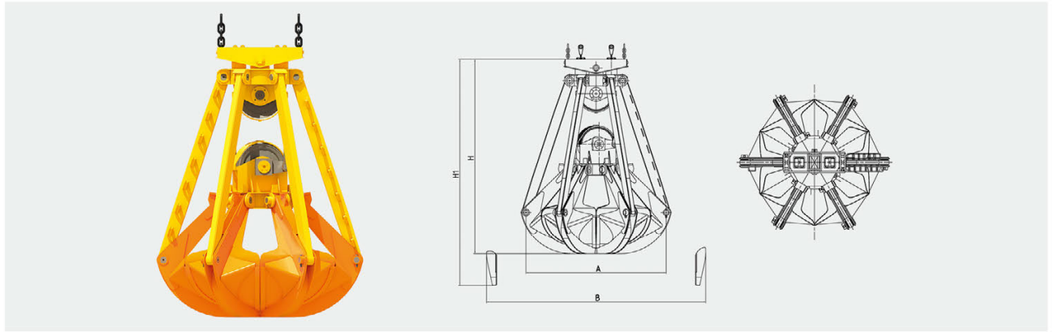

设备型号 / 技术参数 Product Model/Technical Specifications

序号 No.	型号 Model	配用起重机吨位 Crane Capacity (t)	容积 Capacity (m^3)	抓斗自重 Grab Bucket Weight (t)	物料比重 Material Specific Gravity (t/m^3)	滑轮倍率 Pulley ratio	钢绳直径 Rope Diameter (φmm)	滑轮直径 Pulley Diameter (φmm)	抓斗闭合高度 Grab Bucket Closing Height (Hmm)	抓斗张开高度 Grab Bucket Opening Height (H1mm)	抓斗闭合长度 Grab Bucket Closing Length (Amm)	抓斗张开长度 Grab Bucket Opening Length (Bmm)
1	LS0305	3	0.5	1.85	＜2.0	4	φ13	φ300	2150	2460	1780	2100
2	LS0507	5	0.75	2.40	＜2.5	5	φ16	φ350	2380	2730	2000	2480
3	LS0510	5	1.0	2.60	＜2.0	5	φ16	φ400	2690	3120	2200	2800
4	LS0515	5	1.5	2.60	＜1.6	5	φ16	φ400	2760	3000	2400	3000
5	LS0530	5	3.0	2.60	＜0.8	3	φ16	φ400	3100	3660	2700	3600
6	LS1015	10	1.5	4.90	3.3	6	φ20	φ480	3100	4030	2560	3200
7	LS1020	10	2.0	4.80	2.5	5	φ20	φ480	3480	4320	2620	3260
8	LS1030	10	3.0	4.60	1.6	5	φ20	φ480	3360	1060	2700	3400
9	LS1050	10	5.0	4.50	1.0	3	φ20	φ480	3650	4330	3200	4200
10	LS1630	16	3.0	8.00	3.0	5	φ28	φ560	3795	4632	3480	3200
11	LS1655	16	5.5	7.80	1.8	5	φ28	φ560	4045	4975	3700	4600
12	LS2040	20	4.0	8.20	2.8	5	φ30	φ650	3985	4936	3600	4300
13	LS2545	25	4.5	11.00	3.3	6	φ32	φ720	4280	4877	3500	4600
14	LS2565	25	6.5	13.00	2.0	4	φ32	φ720	4390	5418	3800	4800
18	LS4080	40	8.0	17.00	3.0	6	φ40	φ910	5273	6080	3960	5200
19	LS4011	40	11.0	18.00	2.0	6	φ40	φ830	5539	6442	3988	6238

03 双绳抓斗 Double Rope Grab Bucket

适用于港口、码头、建筑路桥等行业，抓取各类松散堆积物。

该类抓斗适配起重机装有两组卷筒，每组卷筒引出一根钢丝绳，其中一根钢丝绳捆扎在抓斗吊绳环上，作起升钢丝绳用，另一根作开闭钢丝绳用，分别经过导绳轮、上承梁滑轮、下承梁滑轮形成滑轮组，起开闭作用。

Suitable for harbours, wharves, construction roads and bridges, etc., to grab all kinds of loose piles.

This kind of grapple is equipped with two sets of reels, each set of reels leads to a wire rope, one of which is tied on the rope ring of the grapple for lifting the wire rope, and the other one is used for opening and closing the wire rope, which passes through the rope guide pulley, the upper bearing beam pulley, and the lower bearing beam pulley to form the pulley group, and plays the role of opening and closing the rope.

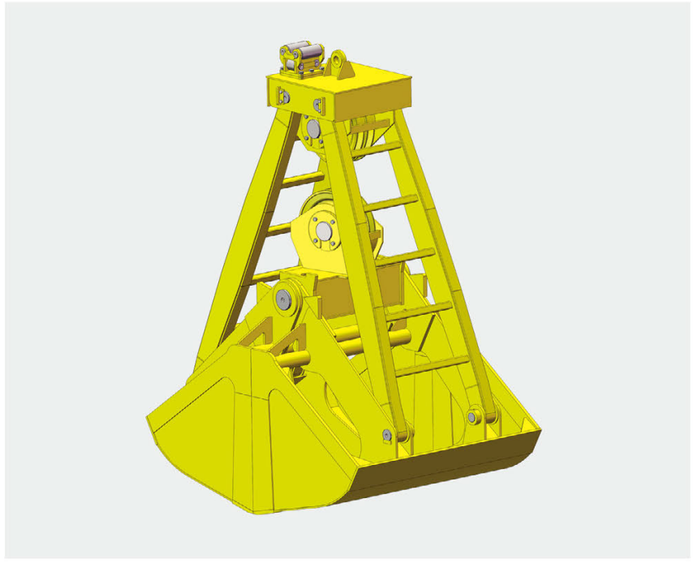

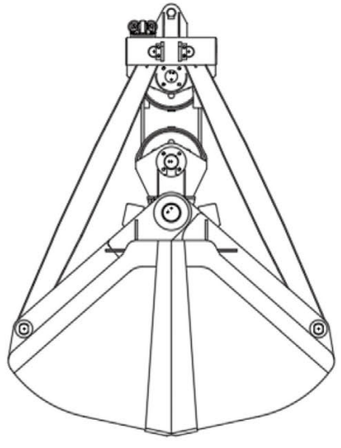

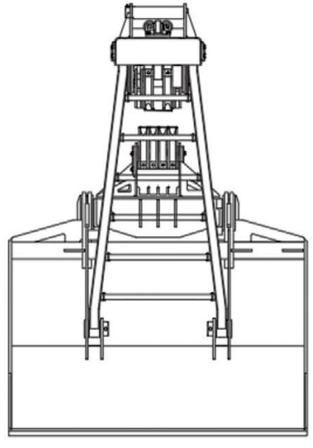

04 单绳抓斗 Single Rope Grab Bucket

适用于只有一个起升卷筒（单钩）的各类起重机上，装卸物料开闭自如，整机使用拆挂方便，适用于水下陆上作业，进行抓取、堆积。

该类抓斗开闭主要靠弹性元件、滑架、锁扣配合运动来实现，无法在空中张开。

Applicable to only one hoisting drum (single hook) on all types of cranes, loading and unloading of materials open and close freely, the use of the whole machine is easy to dismantle and hang, suitable for underwater land operations, grabbing, stacking

This kind of grab opens and closes mainly by the elastic element, the slide frame, the latch with the movement to realise, can't open in the air.

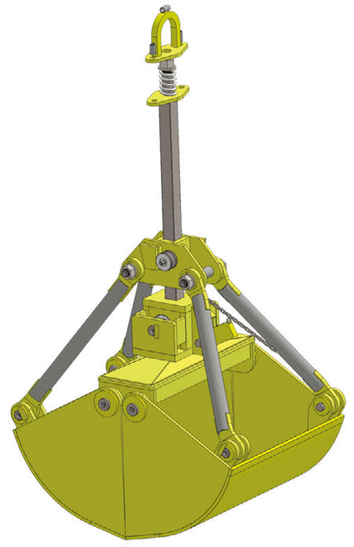

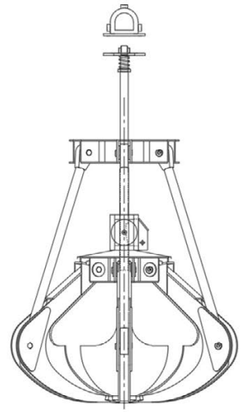

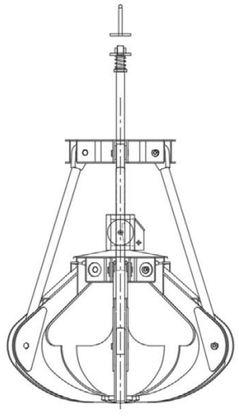

设备型号 / 技术参数 Product Model/Technical Specifications

序号 No.	型号 Model	容积 Capacity (m^3)	类型 Type	物料比重 Material Specific Gravity (t/m^3)	滑轮倍率 Pulley ratio	钢绳直径 Rope Diameter (φmm)	滑轮直径 Pulley Diameter (φmm)	抓斗自重 Grab Bucket Weight (t)	配用起重机吨位 Crane Capacity (t)	抓斗闭合高度 Grab Bucket Closing Height (Amm)	抓斗张开高度 Grab Bucket Opening Height (Bmm)	抓斗闭合长度 Grab Bucket Closing Length (Cmm)	抓斗张开长度 Grab Bucket Opening Length (Dmm)	抓斗宽度 Grab Bucket Width (Emm)
1	X3	0.3	轻 Light	1.2	2	φ13	φ200	0.80	2	2960	3900	1100	1385	620
2	XZ5	0.5	轻 Light	1.2	2	φ15	φ200	1.10	3	2960	3900	1100	1385	920
3	XCZ7	0.75	重 Heavy	2.2	2	φ13	φ240	1.80	5	2785	5000	1550	1770	1232
4	XCZZ7	0.75	超重 Super heavy	2.6	2	φ13	φ240	2.05	5	2785	5000	1560	1770	1232
5	XZ10	1	重 Heavy	2.4	2	φ16	φ240	1.80	5	2789	4500	1600	1773	1280
6	X10	1	轻 Light	1.2	2	φ16	φ190	1.60	5	2779	4500	1460	1764	1260
7	XZ15	1.5	重 Heavy	2	2	φ16	φ300	2.40	5	3401	5400	1650	2447	1350
8	XCZ15	1.5	超重 Super heavy	2.8	2	φ18	φ300	3.00	10	3426	5400	1650	2507	1700

05 派拿抓斗 Paina Grab Bucket

适用于港口门机和桥式卸船机。下承梁结构短、强度高、自重减轻、撑杆为封闭型焊接结构、独立传力，稳定性、横向抗弯能力好。各铰点衬套采用优质轴承钢，抓斗使用寿命延长 3-4 倍。抓取物料重量和抓斗自重比达到 1.5-1.9，抓取能力强。

Suitable for harbour gantry and bridge ship unloader. The structure of the lower bearing beam is short, high strength, weight reduction, and the spreader is closed welded structure, independent force transmission, good stability and lateral bending resistance. The bushings at each hinge point are made of high quality bearing steel, which extends the service life of the grab by 3-4 times. The ratio of the weight of the grabbed material to the weight of the grab reaches 1.5-1.9, which has a strong grabbing capacity.

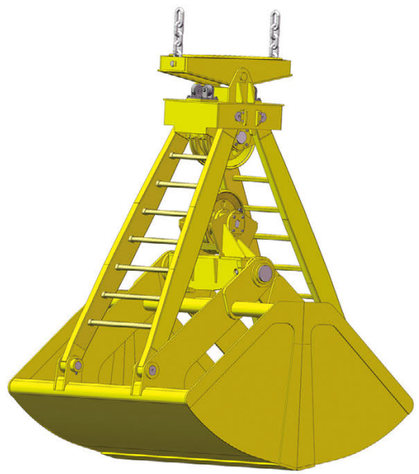



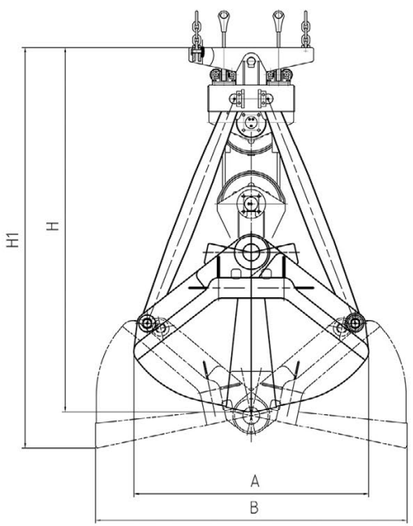

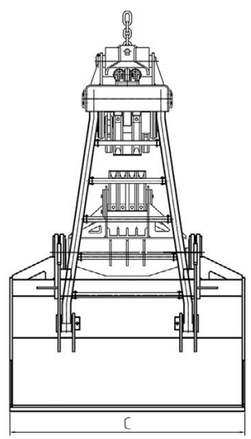

设备型号 / 技术参数 Product Model/Technical Specifications

序号 No.	型号 Model	配用起重机吨位 Crane Capacity (t)	容积 Capacity (m^3)	抓斗自重 Grab Bucket Weight (t)	物料比重 Material Specific Gravity (t/m^3)	滑轮倍率 Pulley ratio	钢绳直径 Rope Diameter (ϕmm)	滑轮直径 Pulley Diameter (ϕmm)	抓斗闭合高度 Grab Bucket Closing Height (Hmm)	抓斗张开高度 Grab Bucket Opening Height (H1mm)	抓斗闭合长度 Grab Bucket Closing Length (Amm)	抓斗张开长度 Grab Bucket Opening Length (Bmm)	抓斗宽度 Grab Bucket Width (Cmm)
1	UP0536	5	3.6	2.20	0.8	3	ϕ16	ϕ315	2630	2960	2150	2920	2190
2	UP0860	8	6	3.20	0.8	3	ϕ20	ϕ400	3180	3610	2560	3455	2590
3	UP1077	10	7.7	3.80	0.8	3	ϕ22	ϕ450	3450	3940	2770	3740	2805
4	UP1612	16	12.5	6.10	0.8	3	ϕ26	ϕ560	4060	4660	3250	4390	3290
5	UP2014	20	14	8.70	0.8	3	ϕ28	ϕ630	4430	5040	3420	4590	3440
6	UP2519	25	19	9.80	0.8	3	ϕ32	ϕ630	4670	5400	3760	5060	3790
7	UP3222	32	22	14.00	0.8	3	ϕ36	ϕ710	5040	5760	3980	5340	4000
8	UP4028	40	28	17.60	0.8	3	ϕ40	ϕ800	5510	6330	4280	5720	4290
9	UP5035	50	35	21.50	0.8	3	ϕ44	ϕ900	6040	6890	4630	6220	4660
10	UP6345	63	45	27.00	0.8	3	ϕ48	ϕ1000	6560	7520	5000	6710	5030
11	UP0530	5	3	2.10	1.0	3	ϕ16	ϕ315	2550	2860	2030	2750	2060
12	UP0849	8	4.9	3.10	1.0	3	ϕ20	ϕ400	3060	3460	2400	3210	2405
13	UP1063	10	6.3	3.80	1.0	3	ϕ22	ϕ450	3320	3780	2590	3490	2615
14	UP1610	16	10	5.90	1.0	3	ϕ26	ϕ560	3900	4450	3010	4080	3060
15	UP2012	20	12	8.50	1.0	3	ϕ28	ϕ630	4300	4860	3240	4340	3250
16	UP2515	25	15	9.20	1.0	3	ϕ32	ϕ630	4520	5170	3530	4760	3570
17	UP3218	32	18	13.20	1.0	3	ϕ36	ϕ710	4890	5550	3770	5030	3770
18	UP4023	40	23	16.40	1.0	3	ϕ40	ϕ800	5350	6090	4050	5420	4060
19	UP5030	50	30	20.00	1.0	3	ϕ44	ϕ900	5860	6650	4400	5860	4390
20	UP6338	63	37.8	25.20	1.0	3	ϕ48	ϕ1000	6380	7250	4730	6340	4750
21	UP0525	5	2.5	2.10	1.25	4	ϕ16	ϕ315	2470	2850	2070	2615	1830
22	UP0841	8	4.1	3.10	1.25	4	ϕ20	ϕ400	3000	3470	2440	3095	2165
23	UP1052	10	5.2	3.70	1.25	4	ϕ22	ϕ450	3240	3770	2630	3330	2330
24	UP1683	16	8.3	5.80	1.25	4	ϕ26	ϕ560	3810	4430	3060	3895	2725
25	UP2095	20	9.5	8.20	1.25	4	ϕ28	ϕ630	4170	4820	3240	4070	2845
26	UP2512	25	12	9.30	1.25	4	ϕ32	ϕ630	4350	5090	3550	4420	3090
27	UP3215	32	15	13.10	1.25	4	ϕ36	ϕ710	4700	5500	3770	4730	3310
28	UP4019	40	19	16.20	1.25	4	ϕ40	ϕ800	5210	6070	4100	5150	3600
29	UP5024	50	24	20.00	1.25	4	ϕ44	ϕ900	5740	6630	4430	5630	3940
30	UP6331	63	31	24.90	1.25	4	ϕ48	ϕ1000	6200	7220	4800	6000	4195
31	UP0520	5	2	1.90	1.6	4	ϕ16	ϕ315	2360	2790	2030	2395	1675
32	UP0833	8	3.3	2.90	1.6	4	ϕ20	ϕ400	2880	3390	2380	2840	1985
33	UP1041	10	4.1	3.50	1.6	4	ϕ22	ϕ450	3085	3660	2570	3040	2125
34	UP1667	16	6.7	5.40	1.6	4	ϕ26	ϕ560	3650	4320	3020	3585	2510
35	UP2078	20	7.8	8.00	1.6	4	ϕ28	ϕ630	4010	4710	3200	3750	2625

续表 Continued table

序号 No.	型号 Model	配用起重机吨位 Crane Capacity (t)	容积 Capacity (m^3)	抓斗自重 Grab Bucket Weight (t)	物料比重 Material Specific Gravity (t/m^3)	滑轮倍率 Pulley ratio	钢绳直径 Rope Diameter (φmm)	滑轮直径 Pulley Diameter (φmm)	抓斗闭合高度 Grab Bucket Closing Height (Hmm)	抓斗张开高度 Grab Bucket Opening Height (H1mm)	抓斗闭合长度 Grab Bucket Closing Length (Amm)	抓斗张开长度 Grab Bucket Opening Length (Bmm)	抓斗宽度 Grab Bucket Width (Cmm)
36	UP2510	25	10	9.00	1.6	4	φ32	φ630	4180	4980	3470	4090	2860
37	UP3212	32	12	12.80	1.6	4	φ36	φ710	4550	5490	3700	4370	3060
38	UP4015	40	15	15.80	1.6	4	φ40	φ800	4970	5900	4000	4680	3275
39	UP5019	50	19	19.50	1.6	4	φ44	φ900	5480	6430	4310	5110	3570
40	UP6324	63	24.6	24.20	1.6	4	φ48	φ1000	5960	7050	4670	5520	3860
41	UP0516	5	1.6	2.20	2.0	4	φ16	φ315	2280	2690	1930	2220	1555
42	UP0826	8	2.6	3.20	2.0	4	φ20	φ400	2790	3260	2260	2660	1860
43	UP1033	10	3.3	3.80	2.0	4	φ22	φ450	3000	3540	2440	2870	2010
44	UP1655	16	5.5	5.60	2.0	4	φ26	φ560	3540	4200	2900	3360	2350
45	UP2065	20	6.5	7.50	2.0	4	φ28	φ630	3910	4600	3070	3560	2490
46	UP2583	25	8.3	9.00	2.0	4	φ32	φ630	4040	4830	3350	3830	2680
47	UP3210	32	10	12.80	2.0	4	φ36	φ710	4400	5200	3590	4070	2850
48	UP4012	40	12.6	15.50	2.0	4	φ40	φ800	4830	5720	3850	4400	3080
49	UP5016	50	16	19.00	2.0	4	φ44	φ900	5320	6260	4160	4800	3360
50	UP6320	63	20	23.00	2.0	4	φ48	φ1000	5780	6850	4520	5180	3620
51	UP0513	5	1.3	2.10	2.5	5	φ16	φ315	2210	2610	1870	2110	1370
52	UP0822	8	2.2	3.20	2.5	5	φ20	φ400	2710	3210	2230	2530	1645
53	UP1027	10	2.7	3.80	2.5	5	φ22	φ450	2920	3490	2400	2710	1760
54	UP1644	16	4.4	5.60	2.5	5	φ26	φ560	3440	4110	2840	3170	2060
55	UP2050	20	5	8.00	2.5	5	φ28	φ630	3790	4490	2970	3330	2160
56	UP2565	25	6.5	9.00	2.5	5	φ32	φ630	3950	4730	3250	3640	2365
57	UP3280	32	8	12.80	2.5	5	φ36	φ710	4270	5100	3490	3860	2510
58	UP4010	40	10.2	15.50	2.5	5	φ40	φ800	4730	5640	3770	4200	2730
59	UP5013	50	13	18.60	2.5	5	φ44	φ900	5200	6160	4110	4560	2960
60	UP6316	63	16.5	22.00	2.5	5	φ48	φ1000	5640	6730	4440	4890	3180
61	UP0510	5	1	2.20	3.2	6	φ16	φ315	2160	2590	1840	2000	1200
62	UP0816	8	1.6	3.30	3.2	6	φ20	φ400	2620	3120	2150	2325	1395
63	UP1020	10	2	3.80	3.2	6	φ22	φ450	2810	3370	2320	2500	1500
64	UP1633	16	3.3	5.60	3.2	6	φ26	φ560	3320	3980	2720	2920	1750
65	UP2040	20	4	7.60	3.2	6	φ28	φ630	3690	4410	2930	3130	1875
66	UP2550	25	5	8.60	3.2	6	φ32	φ630	3800	4600	3170	3360	2015
67	UP3263	32	6.3	12.20	3.2	6	φ36	φ710	4180	5020	3410	3640	2180
68	UP4080	40	8	15.00	3.2	6	φ40	φ800	4600	5510	3700	3940	2360
69	UP5010	50	10	18.80	3.2	6	φ44	φ900	5030	6000	3980	4240	2540
70	UP6312	63	12	22.00	3.2	6	φ48	φ1000	5470	6530	4300	4560	2735

06 电动抓斗 Electric Grab Bucket

常用于多用途的各类起重机上，自身带有开闭机构，可以在任意高度装卸物料。生产率高于单绳抓斗，使用拆挂方便，装卸效率高。适用于抓取各类松散物。使用本抓斗时根据起升高度增设输送能量的电缆卷线器。

由于电动抓斗在闭合时不再像四绳抓斗那样受闭合钢丝绳向上的拉力，抓斗自重全部用于挖掘作业，因此抓取能力大，适用于抓取矿石等物料。本类抓斗不能用于水下作业。

酒厂专用抓斗，伺服电缸驱动类电动抓斗，导柱连接主机，定位精度高，易实现自动化。斗部整体为 316L 或食品级 304 不锈钢，健康环保，耐腐蚀和高温，使用寿命长，满足酒厂抓斗的使用要求。

Commonly used in all kinds of multi-purpose cranes, with its own opening and closing mechanism, you can load and unload materials at any height. The productivity is higher than single rope grab, easy to dismantle and use, high loading and unloading efficiency. Suitable for grabbing all kinds of loose materials. The use of this grab according to the height of the additional cable reel to transport energy.

As the electric grab is no longer subject to the upward pull of the closed wire rope when it is closed like the four-rope grab, all the weight of the grab is used for digging operation, so it has a large grabbing capacity and is suitable for grabbing ores and other materials. This type of grab can not be used for underwater work.

Grab Bucket for Winery, servo electric cylinder drive type electric grapple, guide column connected to the host, high positioning accuracy, easy to achieve automation. The whole part of the bucket is 316L or food grade 304 stainless steel, which is healthy and environmentally friendly, corrosion and high temperature resistant, and has a long service life to meet the requirements for the use of winery grabs.

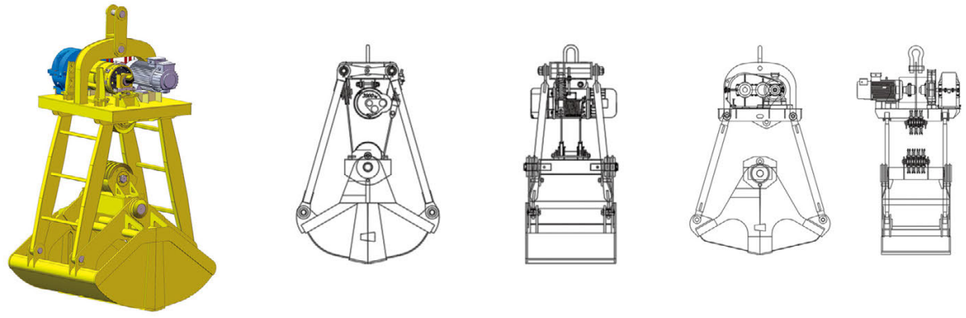

电动抓斗 Electric Grab Bucket

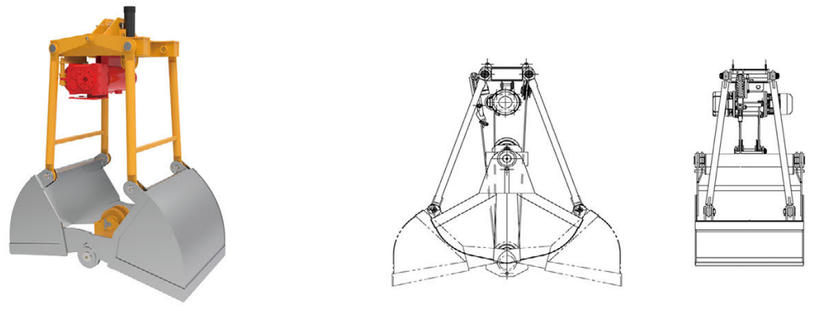

酒厂专用抓斗 Grab Bucket for Winery

07 电动液压抓斗 Electric Hydraulic Grab Bucket

电动液压抓斗分电动液压多瓣抓斗和电动液压双瓣抓斗，主要应用于垃圾焚烧发电、废钢废旧电池处理等。

电动液压抓斗是依靠抓斗本身携带的电气液压系统完成抓斗的开闭动作，综合采用了电气、液压、机械技术，结构紧凑、造型美观、自动化程度高、高效节能，挖掘力和闭合力高于同规格其他抓斗。

恒功率 + 负载敏感 + 压力切断液压系统。进口品牌元器件，密封好，温升低，性价比高。

Electric hydraulic grab bucket, divided into multi-petal electric hydraulic grab bucket and double-petal electric hydraulic grab bucket, is mainly used for waste incineration power generation, waste steel and battery disposal and etc.

Relying on electric hydraulic system to complete grab opening and closing, electric hydraulic grab bucket adopts electrical, hydraulic and mechanical technologies, complete with the characteristics of compact structure, attractive appearance, high degree of automation, high efficiency and energy saving, higher excavation and closing forces than other grab buckets of the same specification.

Constant power+ load sensitivity + pressure cutoff hydraulic system. Adopt components from import brand with good sealing, lower temperature rise, high cost performance.

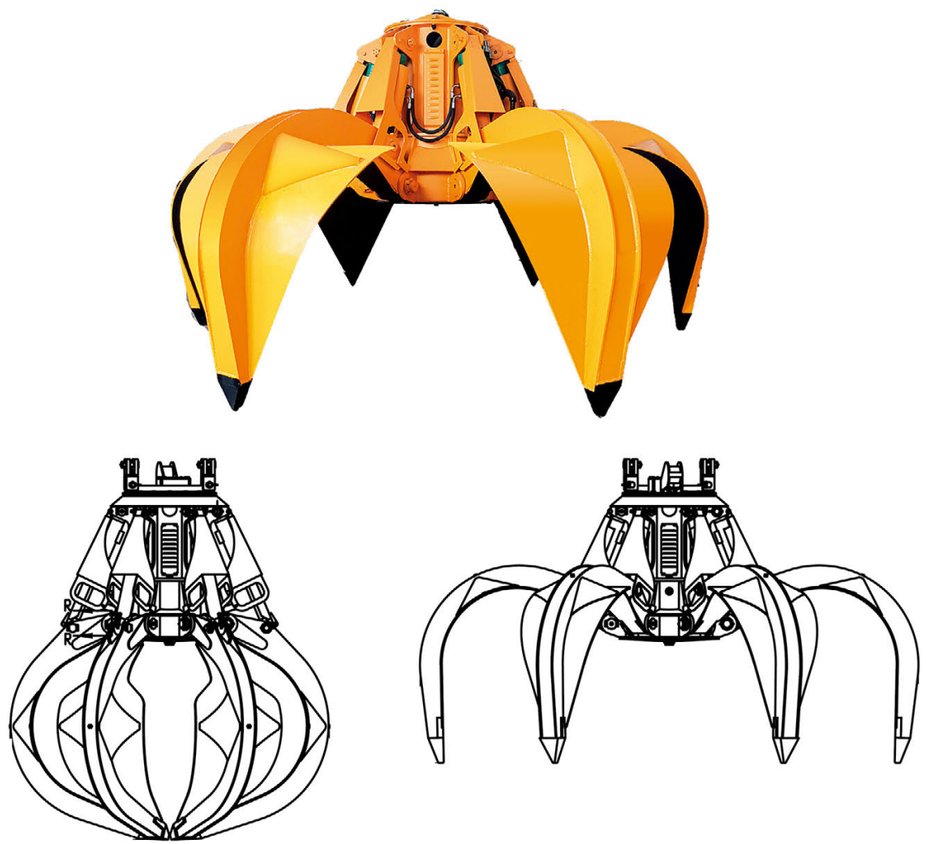

电动液压多瓣抓斗 Multi-petal electric hydraulic grab bucket

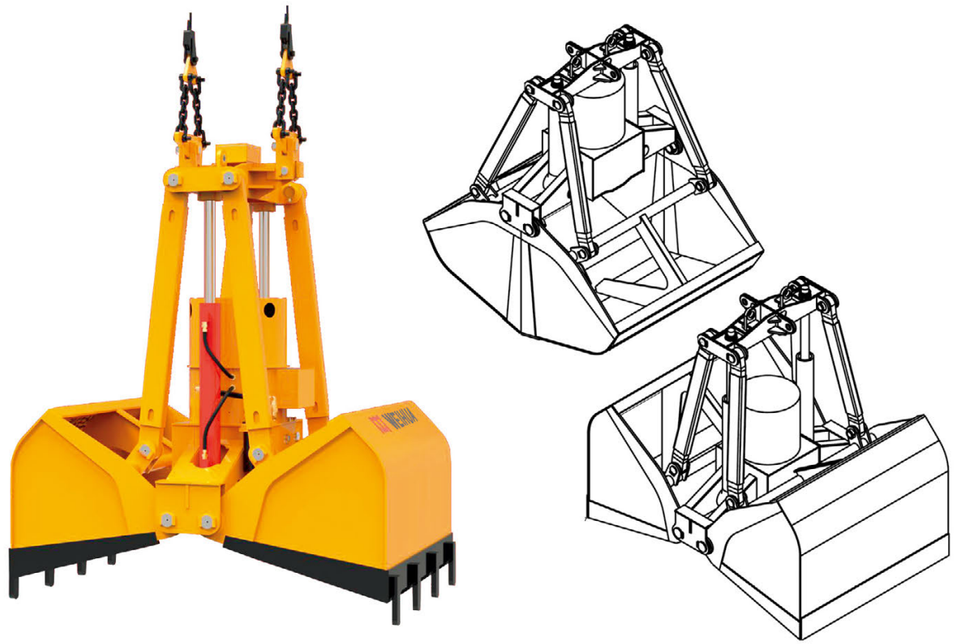

电动液压双瓣抓斗 Double-petal electric hydraulic grab bucket

型号说明：

Z Y 2 3 N –150 –0032 X

- 附件：W- 防护壳；H- 隔热罩；D- 紧密封断面； X- 插入齿尖；A- 刮削装置；G- 橡胶条密封齿；Z- 重叠齿尖
- 容 积（m^3）：0040、0050、0063、0080、0100、0125、0160、0200、0320、0500、0630、0800、1000、1250、1600
- 泵站功率，40% 接电持续率（kW）：050、110、150、185、220、300、 450、550
- N- 普通环境；B- 甲板；U- 水下；M- 垃圾；F- 散料
- 1- 超轻型；2- 轻型；3- 中型；4- 重型；5- 超重型
- 瓣数：2、3、4、5、6
- 液压
- 抓斗

Model Description:

Z Y 2 3 N –150 –0032 X

- Attachment: W-protecting shell; H-heat shiled; D-tight seal section; X-Insert tooth tip; A-Scraping device; G-Rubber strip sealing teeth; Z-overlapping tooth tips
- Volume(m^3): 0040、0050、0063、0080、0100、0125、0160、0200、0320、0500、0630、0800、1000、1250、1600
- Pump station power, 40% continuous power supply rate（kW）: 050、110、150、185、220、300、450、550
- N-normal; B-deck; U-underwater; M-garbage; F-bulk material
- 1-ultra light; 2-light; 3-medium; 4-heavy; 5-super heavy
- Petal: 2、3、4、5、6
- Electric hydraulic
- Grab

设备型号 / 技术参数 Product Model/Technical Specifications

序号 No.	型号 Model	容积 Capacity (m^3)	类型 Type	物料比重 Material Specific Gravity (t/m^3)	功率 Power (kW)	抓斗自重 Grab Bucket Weight (t)	配用起重机吨位 Crane Capacity (t)	抓斗闭合高度 Grab Bucket Closing Height (mm)	抓斗闭合长度 Grab Bucket Closing Length (mm)	抓斗张开高度 Grab Bucket Opening Height (mm)	抓斗张开长度 Grab Bucket Opening Length (mm)	斗瓣数量 Petal number	备注 Note	
1	ZY64-220-0200	2	重 Heavy	2.5	22	4.50	10	3095	2300	2720	3350	6	半开 Semi-open	电动液压多瓣抓斗 Multi-petal electric hydraulic grab bucket
2	ZY63-370-0050	5	中 Medium	1.35	37	3.60	10	3381	2760	2820	3930	6	全闭 Full closing	
3	ZY62-185-0050	5	轻 Light	0.5	18.5	3.10	10	3381	2760	2820	3930	6	全闭 Full closing	
4	ZY62-300-0800	8	轻 Light	1	30	5.10	16	3749	3166	3000	5000	6	全闭 Full closing	
5	ZY62-185-0400	4	轻 Light	1	18.5	4.00	10	3100	2635	2545	4025	6	半开 Semi-open	
6	ZY62-300-0630	6.3	轻 Light	1	30	5.90	16	4520	3090	3880	4860	6	半开 Semi-open	
7	ZY62-450-1000	10	轻 Light	1	45	7.48	20	4530	3280	3650	5150	6	半开 Semi-open	
8	ZY62-450-1200	12	轻 Light	1	45	7.60	20	3988	3717	3262	5489	6	半开 Semi-open	
9	ZY62M-300-0080	8	轻 Light	1	30	5.20	16	3789	3167	3025	4965	6	半开 Semi-open	
10	ZY63-370-0800	8	中 Medium	1.5	37	8.50	20	3560	3365	2790	5080	6	全闭 Full closing	
11	ZY64-220-0150	1.5	重 Heavy	1.5	22	3.78	8	2937	2040	2668	3350	6	全闭 Full closing	
12	ZY23-150-0150	1.5	中 Medium	0.8~1.4	15	2.50	5	3326	1896×1600	3279	2230×1600	2	带齿 With tooth	电动液压双瓣抓斗 Double-petal electric hydraulic grab bucket
13	ZY23-185-0040	4	中 Medium	1.1~1.3	18.5	3.40	10	3100	2200×2100	3910	2930×2100	2		
14	ZY24-220-0300	3	重 Heavy	1.7~2.5	22	3.50	12	2957	2035×1826	2763	2582×1826	2		
15	ZY24F-220-0250	2.5	重 Heavy	1.7~2.5	22	3.50	12	2997	2035×1826	2803	2582×1826	2		
16	ZY23-150-0250X	2.5	中 Medium	1.0~1.3	15	3.11	10	3123	2023×1822	2953	2652×1822	2	带齿 With tooth	
17	ZY23-220-0050X	5	中 Medium	1.0~1.3	22	4.70	16	3560	3420×2400	3230	3050×2400	2	带齿 With tooth	
18	ZY23N-150-0032X	3.2	中 Medium	1.0~1.3	15	3.40	10	3059	2668×2000	3101	2945×2000	2		

松散物料的堆比重表 Bulk density table of loose materials

物料名称 Name of material	堆比重 Bulk density (t/m^3)	物料名称 Name of material	堆比重 Bulk density (t/m^3)
无烟煤 anthracite	0.7~1.0	硫铁矿（块）Pyrite (block)	2~2.6
烟煤 bituminous coal	0.8	锰矿 manganese ore	1.7~1.9
褐煤 lignite	0.6~0.8	镁砂（块）Magnesia sand (block)	2.2~2.5
泥煤 Peat coal	0.29~0.5	粉状镁砂 Powdered magnesia sand	2.1~2.2
泥煤（湿）Peat coal (wet)	0.55~0.65	铜矿 copper mine	1.7~2.1
焦炭 coke	0.36~0.63	铜精矿 Copper concentrate	1.3~1.8
木炭 charcoal	0.2~0.4	铅精矿 Lead concentrate	1.9~2.4
无烟煤粉 Smokeless coal powder	0.84~0.89	锌精矿 Zinc concentrate	1.3~1.7
烟煤粉 Bituminous coal powder	0.4~0.7	铅锌精矿 Zinc concentrate	1.3~2.4
粉状石墨 Powdered graphite	0.45	铁烧结块 Iron fired agglomerates	1.7~2.0
磁铁矿 magnetite	2.5~3.5	碎烧结快 Iron fired agglomerates	1.4~1.6
赤铁矿 Hematite	2.0~2.8	铅烧结快 Lead sintering fast	1.8~2.2
褐铁矿 limonite	1.2~2.1	铅锌烧结快 Lead zinc sintering block	1.6~2.0
锌烟尘 Zinc smoke and dust	0.7~1.5	大石灰石块 Large limestone blocks	1.6~2.0
黄铁矿烧渣 Pyrite cinder	1.7~1.8	中石灰石块 Medium limestone block	1.2~1.5
铅锌团矿 Pyrite cinder	1.3~1.8	小石灰石块 Small limestone blocks	1.2~1.5
黄铁矿球团矿 Pyrite pellets	1.2~1.4	生石灰 Quicklime	1.7~1.8
平炉渣（粗）Open hearth slag (coarse)	1.6~1.85	碎石 Gravel	1.32~2.0
高炉渣 Blast furnace slag	0.6~1.0	白云石（块）Dolomite (block)	1.2~2.0
铅锌水碎渣（湿）Lead zinc water slag (wet)	1.5~1.6	碎白云石 Broken dolomite	1.8~1.9
干煤灰 Dry coal ash	0.64~0.72	砾土 gravel soil	1.5~1.9
煤灰 coal ash	0.7	粘土（小块）Clay (small pieces)	0.7~1.5
粗砂（干）Coarse sand (dry)	1.4~1.9	粘土（湿）Clay (wet)	1.7
粗砂（湿）Coarse sand (wet)	1.4~1.65	水泥 cement	0.9~1.7
细砂（湿）Fine sand (wet)	1.8~2.1	熟石灰（粉）Hydrated lime (powder)	0.5
造型砂 Molding sand	0.8~1.3	熟石灰 Hydrated lime	2

各类抓斗抓取物料表 Materials table for different kinds of grab

抓斗类型 Type of grab	抓取物料 Materials	物料比重 Specific gravity of materials （t/m^3）
轻型 Light duty	焦炭、炉渣、谷类、土豆、中块无烟煤石灰、水泥、泥土砂砾、粘土、碎砖等 Coke, slag, grains, potatoes, medium anthracite lime, cement, soil gravel, clay, broken bricks, etc	0.5~1.2
中型 Medium duty	泥煤、大块无烟煤、压实的煤、粘土、石灰石、碎石、食盐、砂砾、砖块、铁矾土、片状氧化铁皮、水泥、水中的砂和砖等 Peat, large pieces of anthracite, compacted coal, clay, limestone, crushed stone, table salt, gravel, bricks, bauxite, flaky iron oxide scale, cement, sand and bricks in water, etc	＞ 1.2~2.0
重型 Heavy duty	石灰石、重粘土、中小块矿石、硬石块、棍柱状氧化铁皮铁矿石、铅精矿粉等 Limestone, heavy clay, small to medium-sized ores, hard stones, rod-shaped oxidized iron ore, lead concentrate powder, etc	＞ 2.0~2.6
超重型 Super heavy duty	大块矿石、大块锰矿石、沉积结块的铅矿粉等大块矿石、大块锰矿石、沉积结块的铅矿粉等 Large pieces of ore, bulk Sedimentary agglomerate of manganese ore, lead ore powder, etc	＞ 2.6~3.3

集装箱吊具 CONTAINER SPREADERS

01 电动式集装箱吊具 Electric Container Spreader

1、电机减速机、接近开关标配为国际品牌，电机服务系数 1.6 以上。
2、旋转和平移均为双电机减速机。
3、带指示灯，具有旋销互锁与检测功能。

1.Adopt motor, gearbox, approach switch from international brands. Service coefficient of motor is 1.6 and above.
2.Rotation and translation adopt double motor and gearbox.
3.Equip with indicator light and provides the function of twist pin interlock and detection.

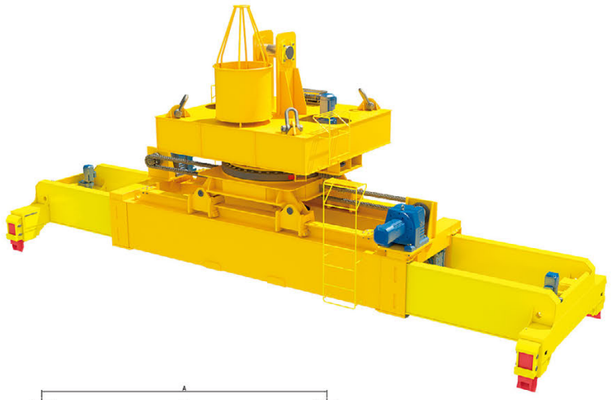

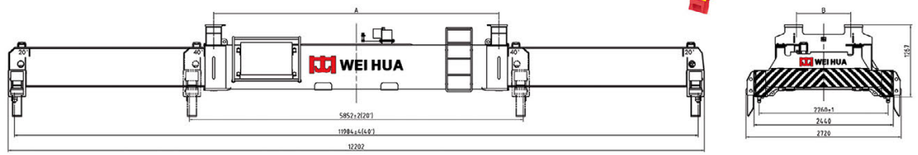

设备型号 / 技术参数（A，B 尺寸可选） Product Model/Technical Specifications

型号 specification：JD01ST40-41FG		电源电压 power supply	AC 380V 50Hz（可选 optional）
适用 ISO 标准 20'、40' 集装箱 Applicable for ISO 20' and 40' container		控制电压 control voltage	AC 220
额定起重量 rated lifting capacity	41t	整机功率 total power	⩽ 6kW
允许载荷偏心 allowable eccentricity	长度方向 1.25m，宽度方向 0.26m Length direction-1.25m Width direction-0.26m	最大消耗功率 maximum consumption power	4kW
		防护等级 protection grade	IP55
四角吊耳负重 load of lifting lug on four corner	4×10.25t	环境温度 environmental temperature	-20°C ~+40°C
伸缩形式 telescopic type	减速电机链传动 gear motor chain transmission	转锁形式 Twist lock type	ISO 浮动转锁，减速电机驱动 ISO float twistlock, gear motor drive
伸缩 telescopic (20'~40')	~22s	转锁 Twist lock（90°）	＜ 1s
导板装置 guide plate	固定导板（可拆卸） Fixed guide plate(detachable)	自重 Dead weight	7.5t

02 液压式集装箱吊具 Hydraulic Container Spreader

1、减速机、接近开关标配为国际品牌。
2、液压系统均为开式系统，液压泵、控制阀、马达等主要元器件均为进口品牌。

1.Adopt gearbox, approach switch from international brands.
2.Hydraulic system adopts open type system. Main components such as hydraulic pump, control valves and motors adopt imported brands.



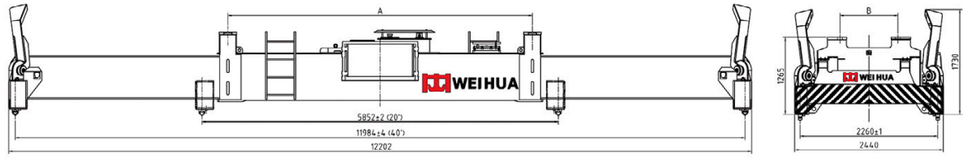

设备型号 / 技术参数（A，B 尺寸可选） Product Model/Technical Specifications

型号 specification：JD02ST40-41MG		电源电压 power supply	AC 380V 50Hz（可选 optional）
适用 ISO 标准 20'、40' 集装箱 Applicable for ISO 20' and 40' container		控制电压 control voltage	AC 220
额定起重量 rated lifting capacity	41t	系统功率 total power	⩽ 8kW
允许载荷偏心 allowable eccentricity	长度方向 1.25m，宽度方向 0.26m Length direction-1.25m Width direction-0.26m	系统工作压力 system operation pressure	100bar
		防护等级 protection grade	IP55
四角吊耳负重 load of lifting lug on four corner	4×10.25t	环境温度 environmental temperature	-20°C ~+40°C
伸缩形式 telescopic type	液压马达链传动 hydraulic motor chain transmission	转锁形式 twistlock type	ISO 浮动转锁，液压缸驱动 ISO float hydraulic cylinder drive
伸缩 telescopic (20'~40')	~24s	转锁 Twist lock（90°）	＜ 1s
导板装置 guide plate device	液压马达驱动 hydraulic motor drive	导板力矩 guide plate torque	2400/4000N.m
导板 guide plate（180°）	5~7s	自重 Dead weight	8.6t

03 倾翻式集装箱吊具 Tilting Container Spreader

适用于散货集装箱运输，分为双箱和单箱倾翻式集装箱吊具。
自重轻，与普通集装箱吊具或吊具上架间快换连接，使用便捷。
遥控操作、全液压驱动，具有倾翻机构、伸缩机构、箱门开闭机构等，性能稳定，安全高效，作业效率较传统方式大大提升。

Divided into two containers and one container tilting spreader, it is suitable for transport of bulk materials container. It owns lightweight, easily connect with ordinary container spreader or headblock,
Remote control operation, fully hydraulic drive. It consists of tilting mechanism, telescopic mechanism, container door opening and closing mechanism and etc. It provides the function of stable performance, safety and efficiency, higher working efficiency.

双箱倾翻式集装箱吊具 Two containers tilting spreader



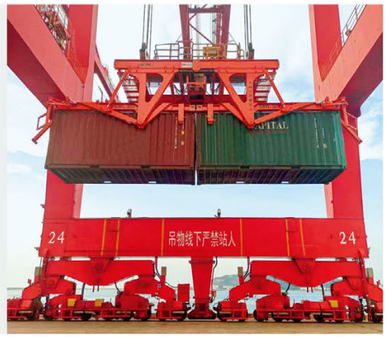

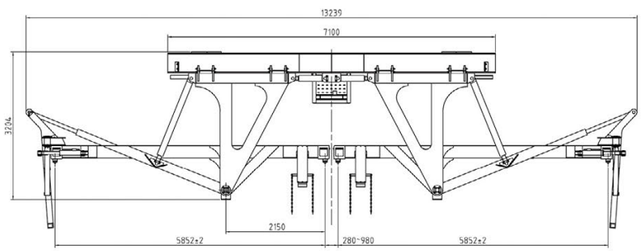

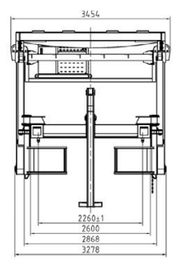

设备型号 / 技术参数 Product Model/Technical Specifications

型号 specification：DTO02SF20-（30+30）MS		电源电压 power supply	AC 380V 50Hz（可选 optional）
适用 ISO 标准 20' 集装箱 Applicable to ISO 20' container		控制电压 control voltage	DC 24
额定起重量 rated lifting capacity	30t	系统功率 system power	≤ 8kW
允许载荷偏心 allowable load eccentricity	长度方向 0.65m，宽度方向 0.26m Length direction -0.65m Width direction-0.26m	系统额定压力 system rated pressure	12MPa
		防护等级 protection grade	IP55
四角吊耳负重 Load of lifting lug on four corner	4×7.5t	环境温度 environmental temperature	-20°C ~+40°C
动作形式 Operation form	液压油缸驱动 hydraulic cylinder drive	自重 deadweight	13t
平移行程 translation stroke	350mm	平移开 / 闭时间 translation opening/closing time	12/8s
倾翻角度 tilt degree	-2° ~45°（可选 optional）	倾翻开 / 闭时间 tilting opening/closing time	150/120s
适用 application	吊具上架、集装箱吊具 headblock, container spreader		

单箱倾翻式集装箱吊具 One container tilting spreader

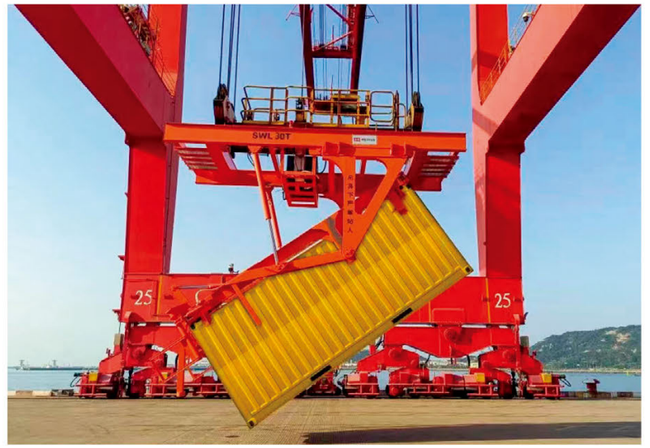

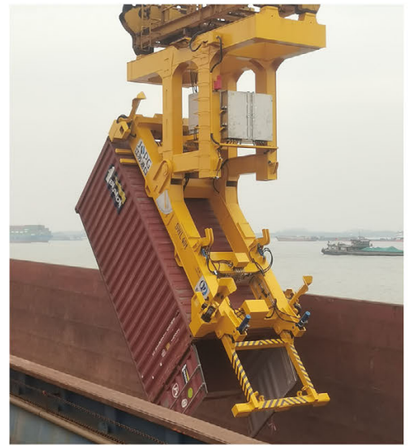

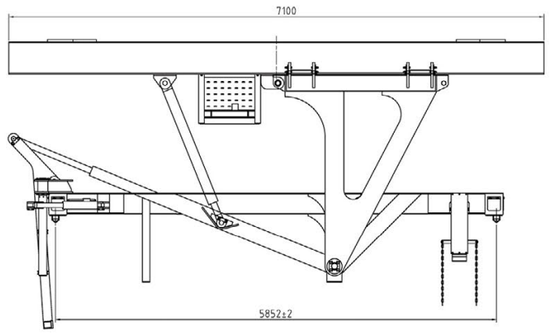

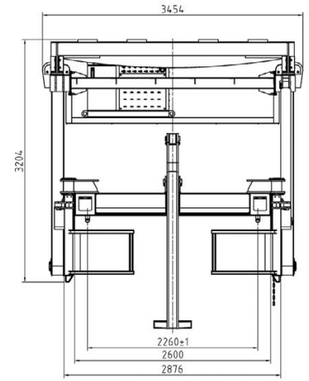

设备型号 / 技术参数 Product Model/Technical Specifications

型号 specification：STO02SF20-30MS		电源电压 power supply	AC 380V 50Hz（可选 optional）
适用 ISO 标准 20' 集装箱 Applicable to ISO 20' container		控制电压 control voltage	DC 24
额定起重量 rated lifting capacity	30t	系统功率 system power	≤ 8kW
允许载荷偏心 allowable load eccentricity	长度方向 0.65m，宽度方向 0.26m Length direction -0.65m，Width direction-0.26m	系统额定压力 system rated pressure	12MPa
		防护等级 protection grade	IP55
四角吊耳负重 Load of lifting lug on four corner	4×7.5t	环境温度 environmental temperature	-20°C ~+40°C
动作形式 Operation form	液压油缸驱动 hydraulic cylinder drive	自重 deadweight	8t
倾翻角度 tilt degree	-2° ~45°（可选 optional）	倾翻开 / 闭时间 tilting opening/closing time	150/120s
适用 application	吊具上架、集装箱吊具 headblock, container spreader		

钢卷吊具 STEEL COIL SPREADERS

01 三丝杠钢卷吊具 Three Screw Steel Coil Spreader

适用于卷材转运。

1、多组检测传感器，安全可靠。

2、三丝杠伸缩臂机构，270°旋转，多组可调尼龙滚轮护卷机构。

It is applicable for coil transportation.

1.Multiple detection sensor, safety and reliability.

2.Three screw telescopic arm, 270 degree of rotation, multiple adjustable nylon roller protection mechanism.



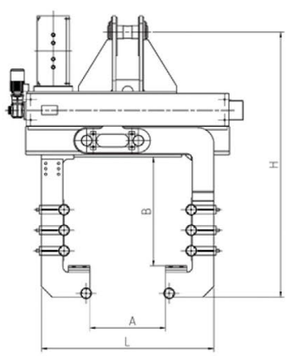

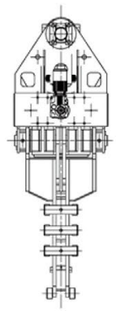

设备型号 / 技术参数 Product Model/Technical Specifications

额载 Rated load	钢卷参数 Steel coil data mm	夹具开度 Opening Amm	外形尺寸 dimension mm		
			B	H	L
10t	内径 inner diameter：500 外径 outer diameter：2200	300~2000	1100	2700	2900
16t	内径 inner diameter：500 外径 outer diameter：2200	300~2000	1100	2700	2900
20t	内径 inner diameter：500 外径 outer diameter：2200	300~2000	1100	2700	2900
32t	内径 inner diameter：500 外径 outer diameter：2200	300~2000	1100	2700	2900

02 C 型钩钢卷吊具 C Hook Steel Coil Spreader

适用于卷材的水平吊运。

结构简单，安全可靠。可以根据用户要求进行特殊设计。

It is applicable for horizontal transportation of coil.

Simple structure, safety and reliability. It can be specially designed according to user requirements.

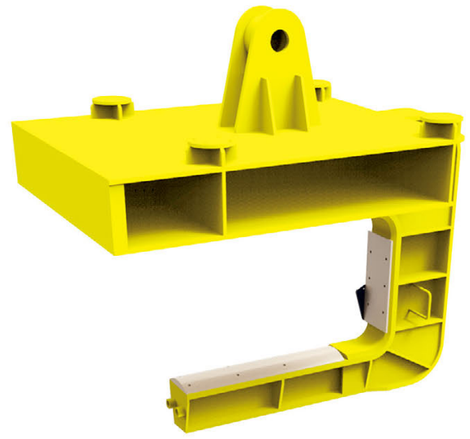

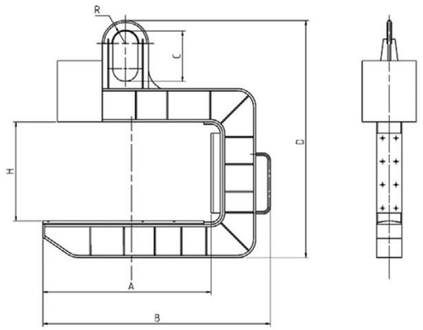

设备型号 / 技术参数 Product Model/Technical Specifications

额载 Rated load	钢卷宽度 Steel coil width mm	钢卷内径 Inner diameter of steel coil mm	外形尺寸 dimension mm					
			A	B	C	D	H	R
5t	750~900	⩾ 400	900	1225	200	1144	500	60
	900~1100	⩾ 500	1100	1450	200	1330	600	60
	1100~1300	⩾ 500	1300	1670	200	1330	600	60
10t	750~900	⩾ 500	900	1290	300	1555	650	90
	900~1120	⩾ 500	1120	1555	300	1768	850	90
	1100~1300	⩾ 500	1300	1758	300	1722	750	90
	1300~1500	⩾ 500	1500	1955	300	1854	850	90
16t	900~1100	⩾ 600	1100	1540	310	1850	850	90
	1100~1250	⩾ 600	1250	1710	310	1870	850	90
25t	900~1100	⩾ 600	1100	1570	370	1982	860	110
	1100~1300	⩾ 700	1300	1810	370	2058	860	110
32t	1400~1660	⩾ 700	1660	2240	550	2450	850	130

03 电动钢卷吊具 Electric Steel Coil Spreader

由吊耳、夹臂、电气控制系统等组成。适用于钢厂卧卷搬运、仓库堆垛、汽车和火车的装卸现场。
结构紧凑、重量轻、效率高、适应性强、安全可靠、维修方便。可以根据用户要求进行特殊设计。

It is made up of lifting lug, clamp boom and electrical control system, which is used in horizontal coil handling in steel mills, warehouse stacking, loading and unloading for cars and trains.
It owns compact structure, light weight, high efficiency, strong adaptability, safety and reliability, easy maintenance.
It can be specially designed according to user requirements.



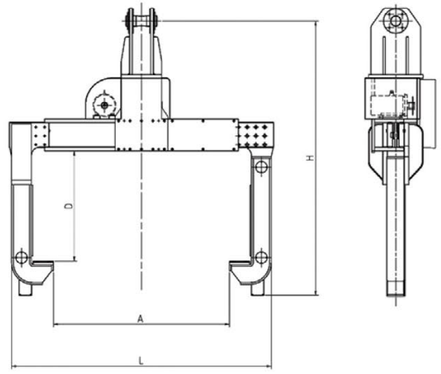

设备型号 / 技术参数 Product Model/Technical Specifications

额载 Rated load	钢卷参数 Steel coil data mm	夹具开度 Opening Amm	外形尺寸 dimension mm		
			D	H	L
10t	内径 inner diameter：500 外径 outer diameter：2200	300~2000	1100	3100	2900
16t	内径 inner diameter：500 外径 outer diameter：2200	300~2000	1100	3100	2900
20t	内径 inner diameter：500 外径 outer diameter：2200	300~2000	1100	3100	2900
32t	内径 inner diameter：500 外径 outer diameter：2200	300~2000	1100	3100	2900

龙门钩吊具 GANTRY HOOK SPREADER

用于冶金行业铁水包、钢渣包的运输。
1、纯机械结构，自润滑轴承，安全可靠且易维护。
2、选装平衡吊叉，吊运过程平衡性好。
3、主要受力焊缝 100% 超声波探伤。
4、板钩和受力板材沿钢板轧制方向下料。
5、铰接孔及板钩钩口全部镗削加工，经久耐用。

Used for the transportation of molten iron and steel slag ladles in the metallurgical industry.
1.Pure mechanical structure, self-lubricating bearings, safe, reliable, and easy to maintain.
2.Optional balanced lifting fork, with good balance during lifting process.
3.100% ultrasonic testing of the main stress bearing welds.
4.Plate hooks and stressed plates are cut along the rolling direction of the steel plate.
5.All hinge holes and plate hook openings are bored and processed, ensuring durability.





挂梁类吊具 HANGING BEAM SPREADER







定制吊具 CUSTOMIZED SPREADER

01 智能类定制吊具 Intelligent Customized Spreader





养生池智能吊具 Intelligent spreader for health pools

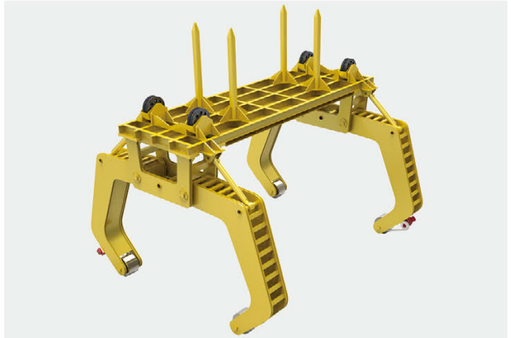

抱管吊具 Spreader for lifting pipe

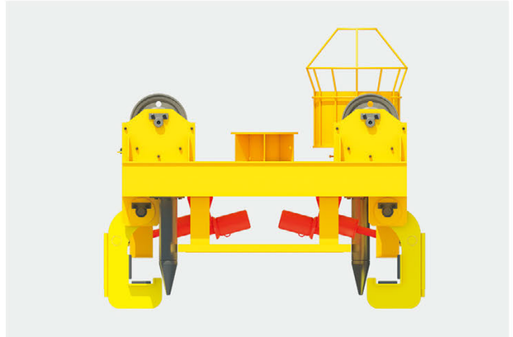

防爆智能吊具 Explosion-proof intelligent spreader



料箱翻转吊具 Bunker overturn spreader



管桩吊具 Spreader for lifting pipe pile





汽车模具吊具 Spreader for lifting automobile die





车架转载智能吊具 Intelligent spreader for frame transfer

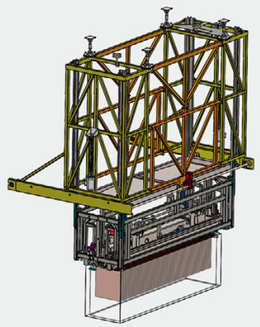



电解铜吊具 Electrolytic copper spreader

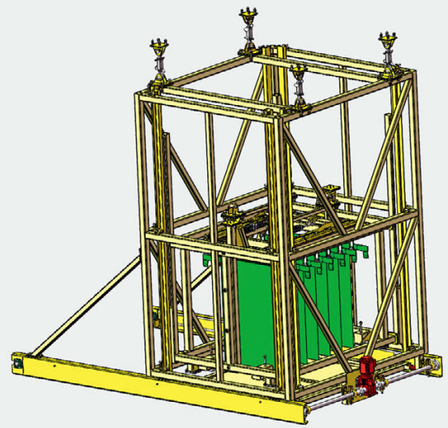

电解镍吊具 Electrolytic nickel spreader

02 特殊类定制吊具 Special Customized Spreader



晶筒吊具 Cylinder crystal speader

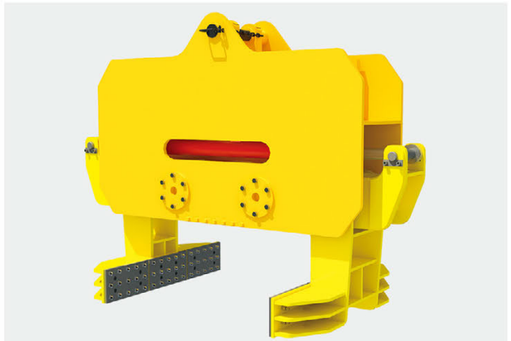

圆棒液压吊具 Round rod hydraulic spreader



兑铁翻包吊具 Spreader for hot metal charging and ladle tilting



纸卷吊具 Paper roll spreader



吨包袋切割吊具 Ton bag cutting spreader



吨包袋提升吊具
Ton bag lifting spreader





真空钢板吸盘吊具 Vacuum steel plate sucker spreader



石墨极吊具
Graphite pole spreader



大型预制件专用吊具
Special spreader for large prefabricated components



环件吊具 Ring part spreader



PC 类吊具 PC type spreader

非吊具类产品 OTHER PRODUCTS

01 液压兑铁车 Hydraulic Hot Metal Charging Carriage

主要应用于冶金行业熔融金属的运输、浇铸作业。

1、地面低位运输，车间上部可装设整体废气处理系统，更环保。

2、杜绝搬运过程中柔性摇摆，更安全，更高效，更节能。

3、兑液量及兑液速度精确可控，产品质量更高。

4、系统全工作流程便于控制，更易实现数字化工厂。

5、生产效率更高，使用成本更低。

It is mainly used in the transportation and casting operations of molten metals in the metallurgical industry.

1.Low level ground transportation, the upper part of the workshop can be equipped with an overall exhaust gas treatment system, which is more environmentally friendly.

2.Eliminating flexible swaying during transportation is safer, more efficient, and more energy-efficient.

3.The amount and speed of liquid charging are precisely controllable, resulting in higher product quality.

4.The entire workflow of the system is easy to control, making it easier to achieve a digital factory.

5.Higher production efficiency and lower usage costs.



单包兑铁车 Single ladle charging carriage

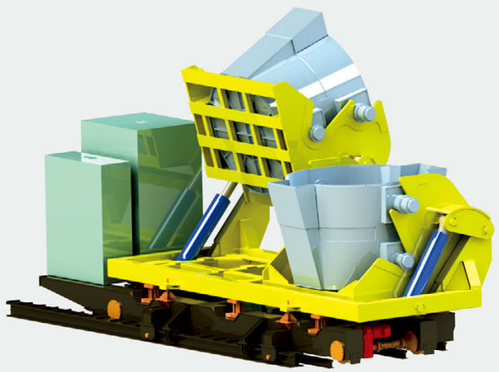

双包倾翻车 Double ladles tilting carriage

02 浇钢车 Steel Pouring Truck

智能铸造专用设备，也称浇注机、浇注车，主要用于钢水的转运和浇注，具有纵向行走、横向移动、竖向升降等功能。

1、内置多种浇注曲线，适用不同规格模具。

2、高精度称重系统、工控机联合控制和 PLC 电液比例技术，实时匹配浇注曲线。

3、无线监控与传输，工厂智能物联。

4、液压同步驱动，安全高效。

5、遥控与柜控双模操作，方便实用。

Intelligent casting special equipment, also known as pouring machine or pouring trolley, is mainly used for the transfer and pouring of molten steel, with longitudinal running, horizontal movement, vertical lifting and other functions.

1.Built in multiple pouring curves, suitable for different specifications of molds.

2.High precision weighing system, industrial computer joint control, and PLC electro-hydraulic proportional technology, real-time matching of pouring curve.

3.Wireless monitoring and transmission, factory intelligent IOT.

4.Hydraulic synchronous drive, safe and efficient.

5.Dual mode operation of remote control and cabinet control is convenient and practical.





设备型号 / 技术参数 Product Model/Technical Specifications

序号 No.	名称 Name	单位 Unit	JGC10	JGC25	JGC60	JGC80	JGC120	JGC240
1	总长 overall length	mm	8250	8250	8250	10500	12500	12500
2	总宽 overall width	mm	7670	7670	7670	9200	9200	9200
3	总高 overall height	mm	6400	6400	6400	7500	7500	7500
4	轨距 gauge	mm	5750	5750	5750	5500	5500	5500
5	额定载荷 Rated load	kg	10000	25000	60000	80000	120000	240000
6	行走驱动方式 Running drive mode	/	变频 / 伺服 frequency conversion/servo					
7	行走功率 Running power	kW	4×2.2	4×2.2	4×3	4×3	4×4	4×4
8	车轮直径 Wheel diameter	mm	500	500	600	700	700	700
9	轨道型号 rail type	/	P43	P43	QU80	QU120	QU120	QU120
10	行走速度 Running speed	m/min	3~30					
11	横移驱动方式 Traverse drive mode	/	同步油缸 / 变频电机 synchronous oil cylinder/inverter motor					
12	横移行程 Traverse stroke	mm	200~2000					
13	横移速度 Traverse speed	mm/s	10~15					
14	升降驱动方式 Lifting drive mode	/	油缸 oil cylinder					
15	升降行程 Lifting height	mm	1200	1200	1200	1200	800	800
16	升降速度 Lifting speed	mm/s	10~15					
17	液压系统额定功率 Rated power of hydraulic system	kW	18	22	30	37	45	75

注：1、未涉及参数按使用方要求执行；2、表中参数可按要求适配。
Note:1. Parameters not involved should be executed as required by the user.
2. Parameters in the table can be adapted as required.

03 全自动板材搬运工作站 Fully Automatic Sheet Metal Handling Workstation

主要应用于板材（如碳基钢板、不锈钢板、铝板、玻璃、木材、平面形结构件等）搬运、生产线上下料、钣金加工、高精度对正堆垛、物流仓储。

1、全部动作智能控制，操作简单，可实现无人值守。
2、伺服驱动系统加直线导轨运行机构，重复定位精度可达 ±1mm，安全可靠。
3、限位导杆检测机构，自动感应吸附与释放板材，堆垛精度可达 ±3mm。
4、多种规格板材自动搬运，适应性强。
5、真空柔性吸盘，对板材表面无任何伤害。

It is mainly used for the handling of sheet metal (such as carbon based steel plates, stainless steel plates, aluminum plates, glass, wood, flat structural components, etc.), loading and unloading for production line, sheet metal processing, high-precision alignment stacking, logistics warehousing.

1.All actions are intelligent controlled, simple operated and are able to achieve unattended operation.
2.The servo drive system and the linear guide rail running mechanism enable repeated positioning accuracy up to±1mm, which is safe and reliable.
3.The limit guide rod detection mechanism can automatically sense absorption and release of the sheets, and the stacking accuracy can reach ±3mm.
4.Automatically handling multiple specifications of sheet metal, with strong adaptability.
5.Vacuum flexible sucker, without any damage to the surface of the sheets.

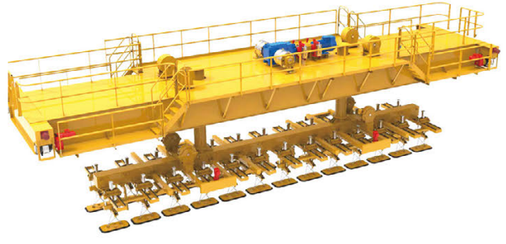

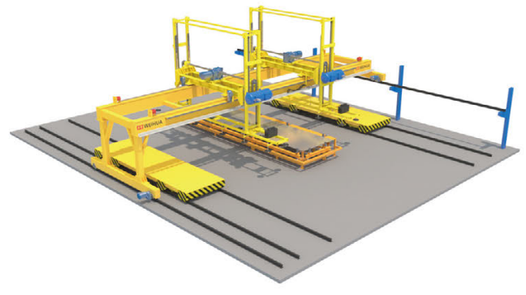





设备型号 / 技术参数 Product Model/Technical Specifications

型号 Type	BBY01	BBY03	BBY10	BBY16	BBY25
自动化 automation	全自动 / 半自动 / 手动遥控 / 远程中控（客户选配） Automatic/semi-automatic/ manual operation/remote control (optional)				
搬运精度 handling accuracy	±3 mm ~ ±10mm				
额定负载 rated load	1.6t	3.2t	10t	16t	25t
行走行程 running stroke	3.2m	3.5m	10m	10m	20m
行走速度 running speed	⩽ 120m/min	⩽ 100m/min	⩽ 80m/min	⩽ 80m/min	⩽ 60m/min
升降行程 lifting height	⩽ 2.5m	⩽ 2m	⩽ 1.5m	⩽ 1.5m	⩽ 1.5m
升降速度 lifting speed	10m/min	10m/min	6m/min	6m/min	6m/min
吊载板材长度 Length of lifted sheet metal	12m	12m	18m	20m	20m
吊载板材宽度 width of lifted sheet metal	1.5m	2m	2.5m	3m	3m
吊载板材厚度 thickness of lifted sheet metal	⩽ 150mm（取决于板材密度 Depending on the density of sheet metal）				
真空吸料时间 Vacuum suction time	1.5s	1.5s	1.5s	1.5s	2s
真空放料时间 vacuum discharge time	0.5s ⩽ t ⩽ 3s				
吸盘调节功能 sucker regulation function	可使用多种规格板材（客户选配） Multiple specifications of sheet metal can be used (optional)				
平台外形尺寸 overall dimensions of platform	桁架式；半门式起重机；门式起重机；行车式起重机（客户选配） Truss type, semi-gantry crane, gantry crane, cranes (optional)				